RỒNG VÀNG
TECHNOLOGY

allc
ALLCONN, LTD

CIRCULAR MINIATURE CONNECTORS

M8, M12 Types

substitutes of Russian SCM8, SCM12

A, B, D, X codes

www.rong-vang-technology.vn

Description

Electrical circular miniature connectors M8 & M12 types of increased reliability are designed for operation in electrical circuits of direct and alternating current at voltages up to 250 V (amplitude value) and current per contact up to 4 A, as well as for operation in Ethernet networks

Connectors are intended for indoor installation, for manual assembly of equipment, connectors are produced in three versions: Plugs with contacts for soldering wires, Receptacles with contacts for soldering wires and Receptacles with PCB contacts

Threaded joint connectors with a conductive coating, number of contacts: 4, 5, 8, with codes A, B, D, X

Connectors of types M8 and M12 are interchangeable and functional when mutually mated with connectors manufactured according to IEC 61076-2-101, IEC 61076-2-104, IEC 61076-2-109 by Phoenix, Amphenol, Binder, Murrelektronik

Technical features

Description	Values
Shell material	Brass nickel plated/Zinc alloy nickel plated
Contact material	Brass/Phosphorus copper gold plated
Insulator material	PA66 for M8 PA+GF/TPU for M12
Sealing material	Epoxy resin/Rubber
Operating temperature	up -25℃ to +80℃
Contact resistance	≤ 5 mΩ
Insulation resistance	≥ 100 MΩ
Working voltage	up to 250 V
Molding material	TPU/PVC
Data transmission	CAT6A
Baud rate	10 Gb/s
Standard	ISO/IEC 24702
Durability	500 cycles
Waterproof grade	IP65, IP67
Mounting Style	solder, PCB

Ordering information

	08	0001	-04	A	0	00000
Shell size (see next page): 08: M8 12: M12						
Type of Shell Versions						
Number of contacts: 4, 5, 8 (see next page)						
Encoding: A, B, D, X (see next page)						
Cable type (mandatory index): 0: if the cable is not used 1: PVC 2: PUR 3: TPU 4: RU 5: PTFE						
Cable Length, mm (mandatory index): 00000: if the cable is not used five digits: Cable Length, mm						

Contact layouts & features

Shell size	Number of contacts	Encoding, male				Rated current	Rated voltage		Conductor size	
		A	B	D	X		AC	DC	AWG	mm^2
08	4	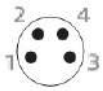	not	not	not	3 A	60 V	60 V	24	0,25
12	4	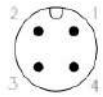	not		not	4 A	250 V	250 V	22	0,34
	5	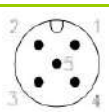	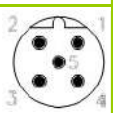	not	not	4 A	60 V	60 V	22	0,34
	8	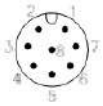	not	not		0,5 A	50 V	60 V	26 - 24	0,14 – 0,25

Shell size	Number of contacts	Encoding, male				Encoding, female			
		A	B	D	X	A	B	D	X
08	4	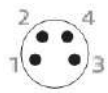	not	not	not	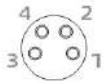	not	not	not
12	4	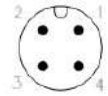	not		not		not		not
	5	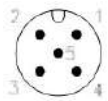	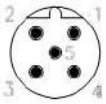	not	not			not	not
	8	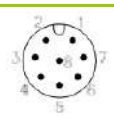	not	not		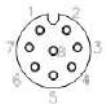	not	not	

Coordinates for PC tail terminations

Viewed from front face of male insulator

M8, 4A	M12, 4A, 4D	M12, 5A, 5B	M12, 8A	M12, 8X
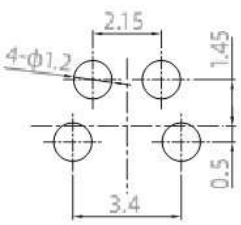	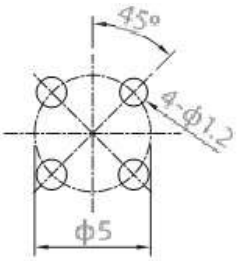	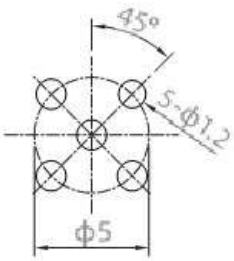	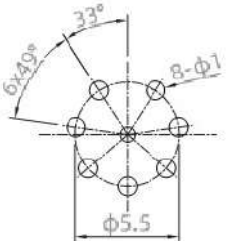	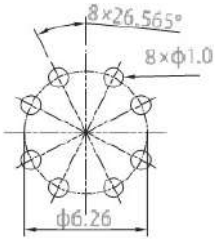

Dimensions

Plugs, M8 type, metal shell, female contacts, with Straight backshell
Part number: 080001-04A 0 00000

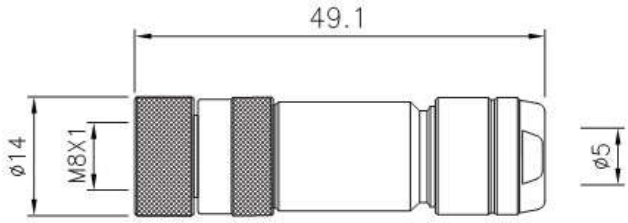

Plugs, M8 type, metal shell, male contacts, with Straight backshell
Part number: 080002-04A 0 00000

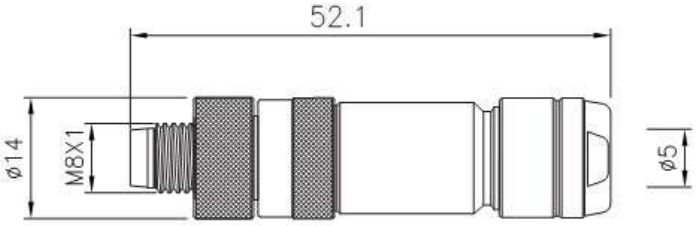

Plugs, M8 type, Plastic shell, female contacts, with Ebow backshell
Part number: 080007-04A 0 00000

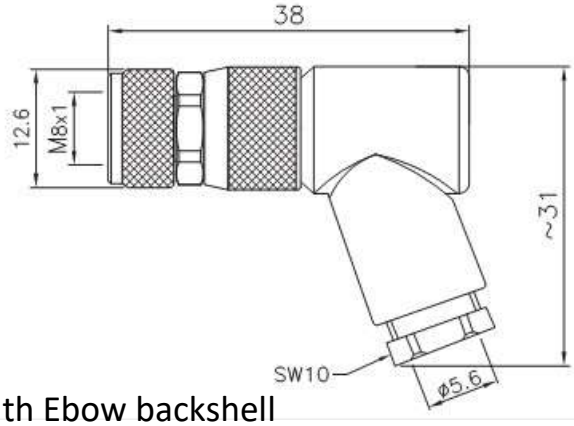

Plugs, M8 type, Plastic shell, male contacts, with Ebow backshell
Part number: 080008-04A 0 00000

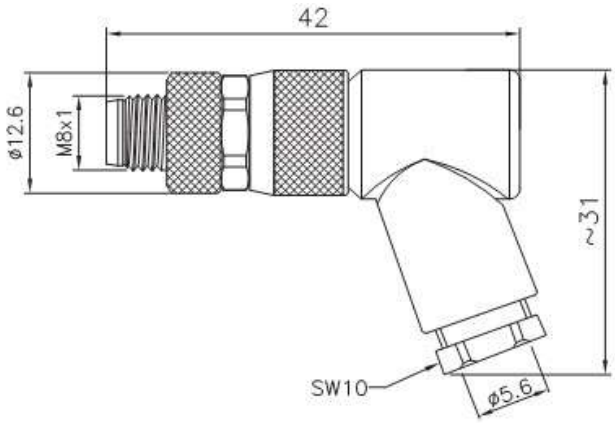

Receptacles, M8 type, metal shell, male contacts, front mount, solder
Part number: 080033-04A 0 00000

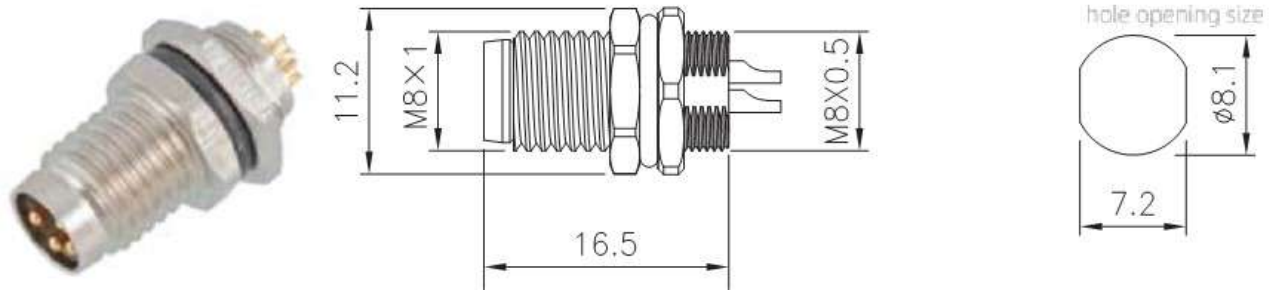

Receptacles, M8 type, metal shell, female contacts, front mount, solder
Part number: 080035-04A 0 00000

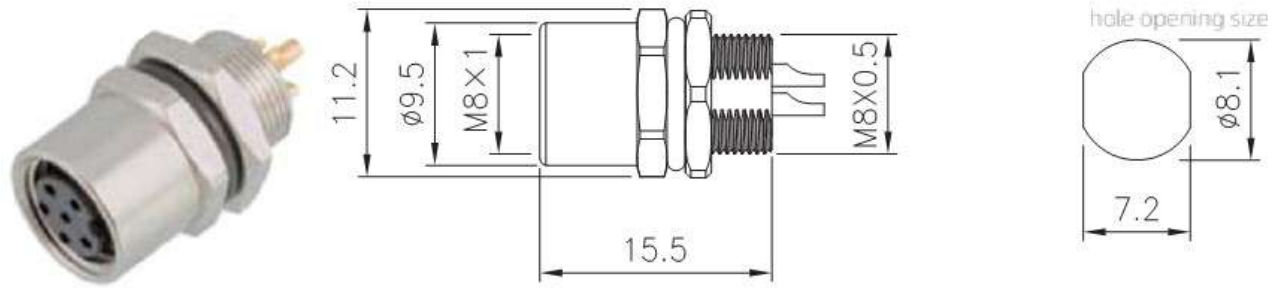

Receptacles, M8 type, metal shell, male contacts, front mount, Straight PCB
Part number: 080034-04A 0 00000

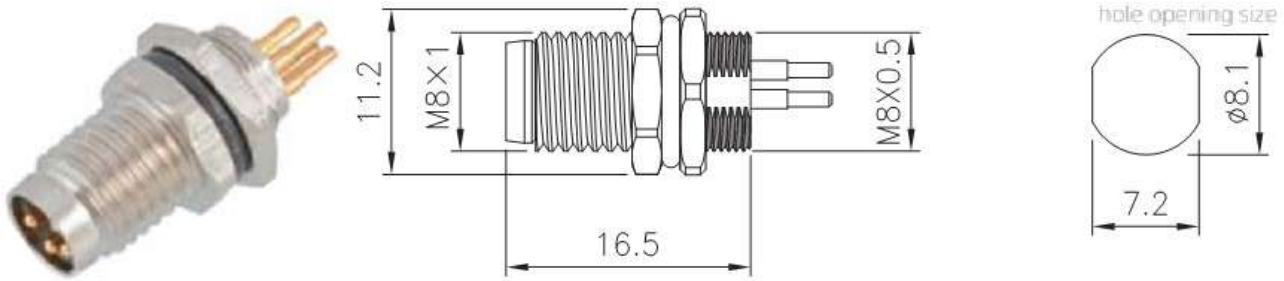

Receptacles, M8 type, metal shell, female contacts, front mount, Straight PCB
Part number: 080036-04A 0 00000

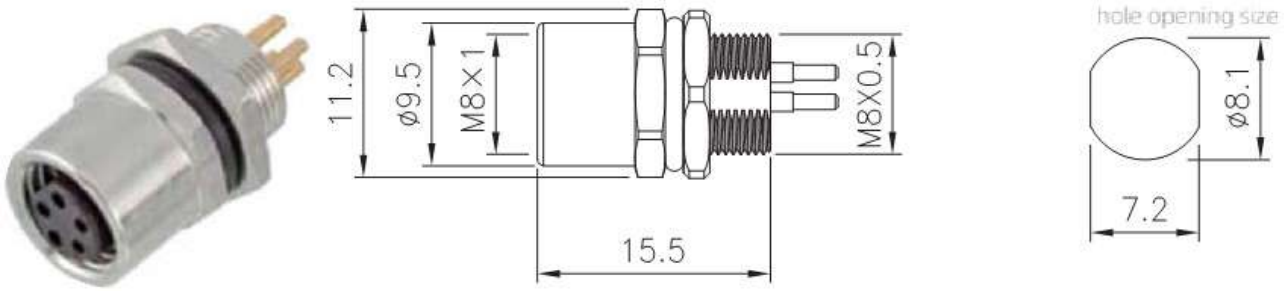

Receptacles, M8 type, metal shell, male contacts, back mount, solder
Part number: 080040-04A 0 00000

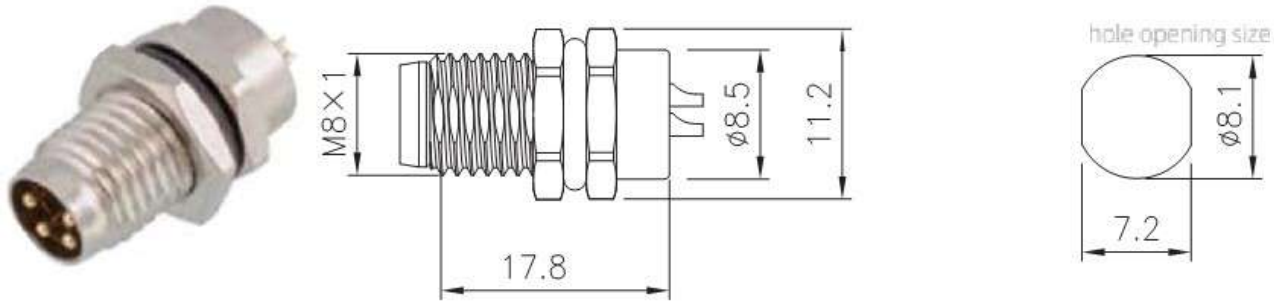

Receptacles, M8 type, metal shell, female contacts, back mount, solder
Part number: 080046-04A 0 00000

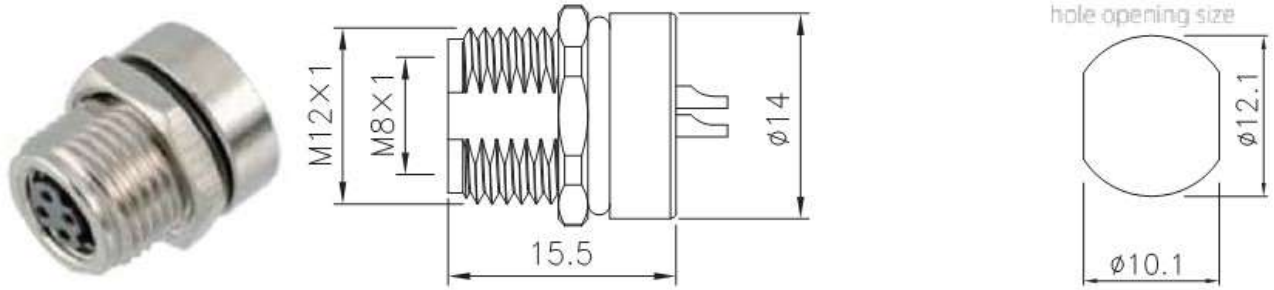

Receptacles, M8 type, metal shell, male contacts, back mount, Straight PCB
Part number: 080041-04A 0 00000

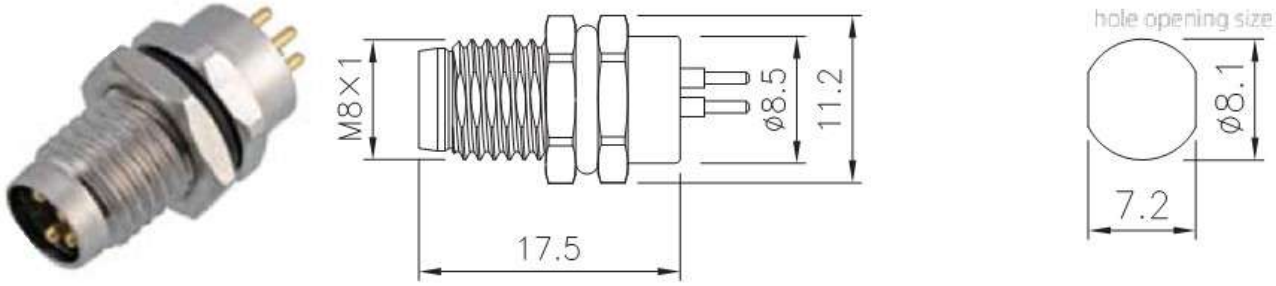

Receptacles, M8 type, metal shell, female contacts, back mount, Straight PCB
Part number: 080047-04A 0 00000

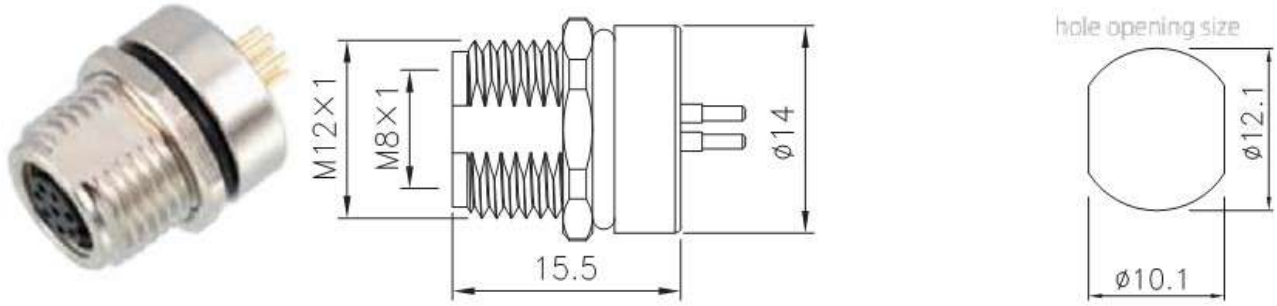

Receptacles, M8 type, metal shell, male contacts, back mount, Straight PCB, Graunded type

Part number: 080048-04A 0 00000

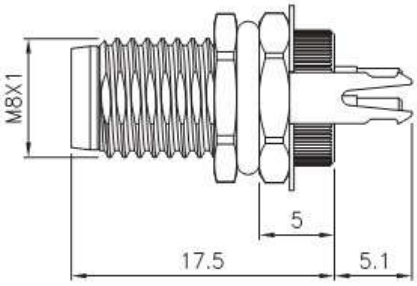

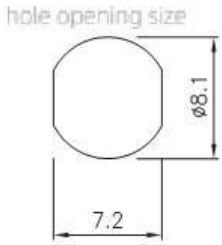

Receptacles, M8 type, metal shell, female contacts, back mount, Straight PCB, Graunded type

Part number: 080049-04A 0 00000

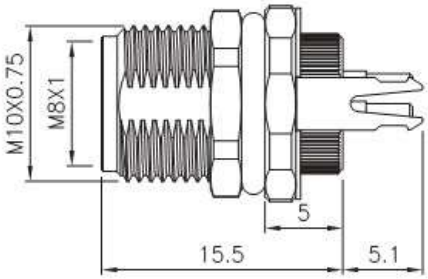

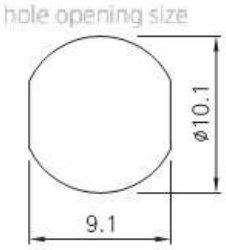

Receptacles, M8 type, metal shell, male contacts, back mount, Angled PCB, Graunded type

Part number: 080050-04A 0 00000

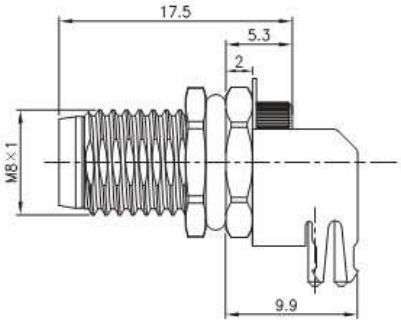

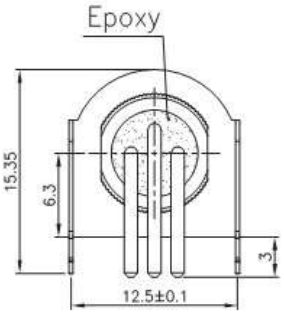

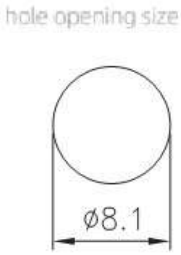

Receptacles, M8 type, metal shell, female contacts, back mount, Angled PCB, Graunded type

Part number: 080051-04A 0 00000

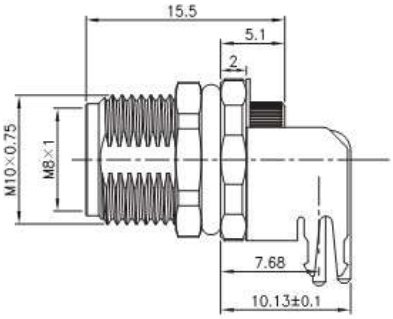

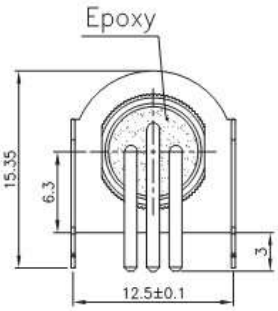

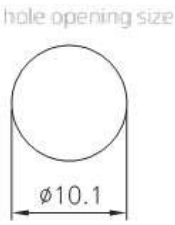

Plugs, M12 type, metal shell, female contacts, with Straight backshell

Part number:

120009-04A 0 00000
120009-05A 0 00000
120009-08A 0 00000
120009-05B 0 00000
120009-04D 0 00000

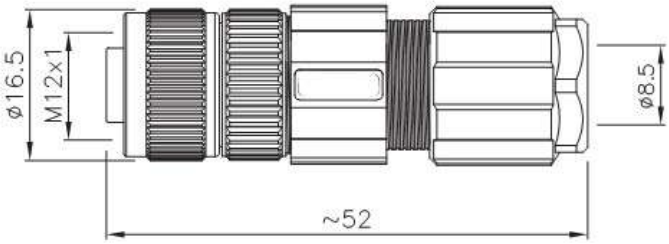

Plugs, M12 type, metal shell, male contacts, with Straight backshell

Part number:

120010-04A 0 00000
120010-05A 0 00000
120010-08A 0 00000
120010-05B 0 00000
120010-04D 0 00000

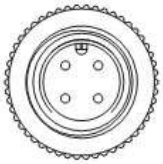

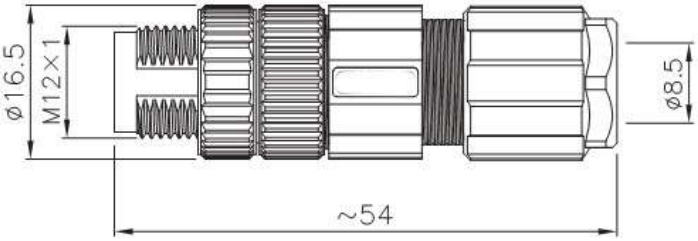

Plugs, M12 type, metal shell, female contacts, with Ebow backshell

Part number:

120011-04A 0 00000
120011-05A 0 00000
120011-08A 0 00000
120011-05B 0 00000
120011-04D 0 00000

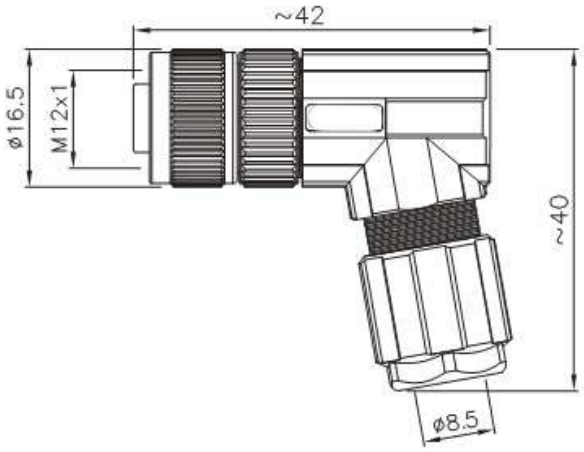

Plugs, M12 type, metal shell, male contacts, with Ebow backshell

Part number:

120012-04A 0 00000
120012-05A 0 00000
120012-08A 0 00000
120012-05B 0 00000
120012-04D 0 00000

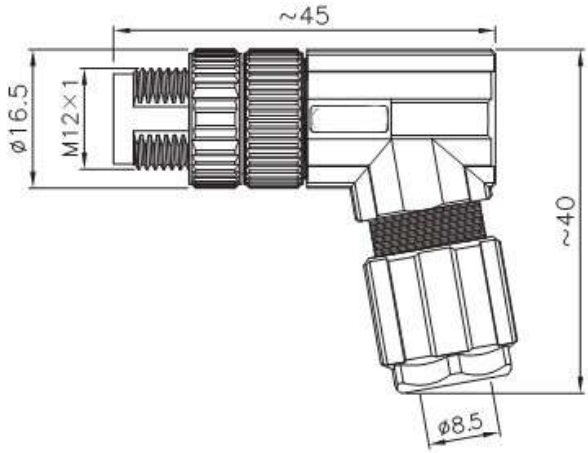

Receptacles, M12 type, metal shell, male contacts, front mount, solder

Part number:

120047-04A 0 00000
120047-05A 0 00000
120047-08A 0 00000
120047-05B 0 00000
120047-04D 0 00000

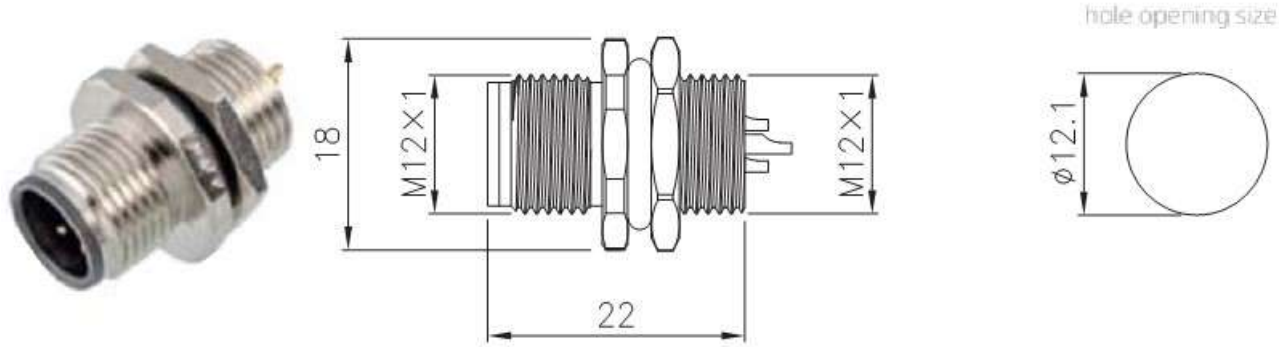

Receptacles, M12 type, metal shell, female contacts, front mount, solder

Part number:

120054-04A 0 00000
120054-05A 0 00000
120054-08A 0 00000
120054-05B 0 00000
120054-04D 0 00000

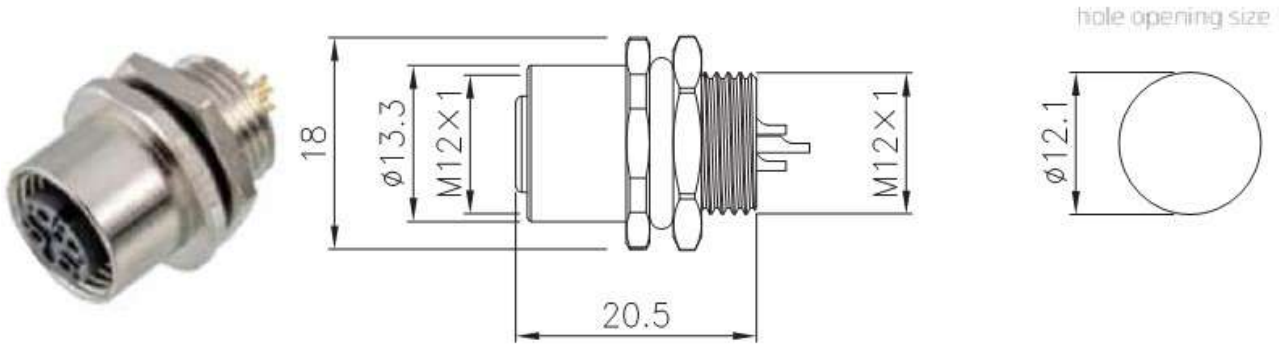

Receptacles, M12 type, metal shell, male contacts, front mount, Straight PCB

Part number:

120050-04A 0 00000
120050-05A 0 00000
120050-08A 0 00000
120050-05B 0 00000
120050-04D 0 00000

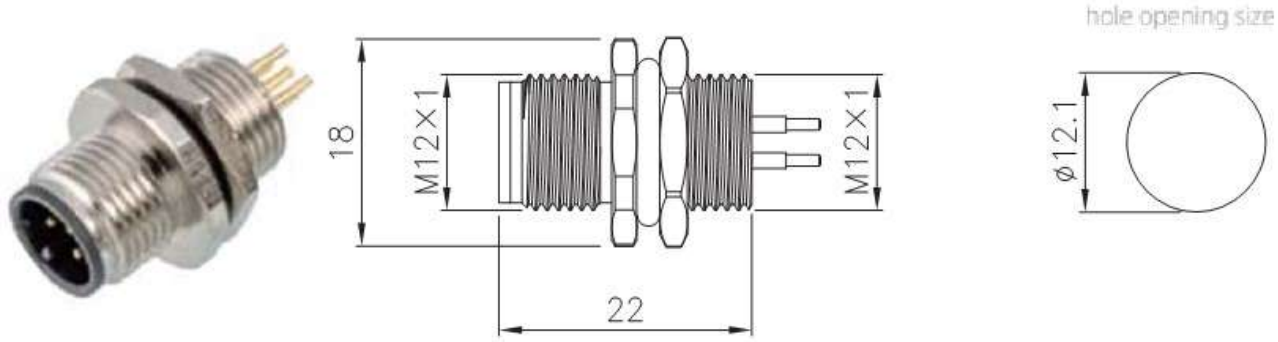

Receptacles, M12 type, metal shell, female contacts, front mount, Straight PCB

Part number:

120058-04A 0 00000
120058-05A 0 00000
120058-08A 0 00000
120058-05B 0 00000
120058-04D 0 00000

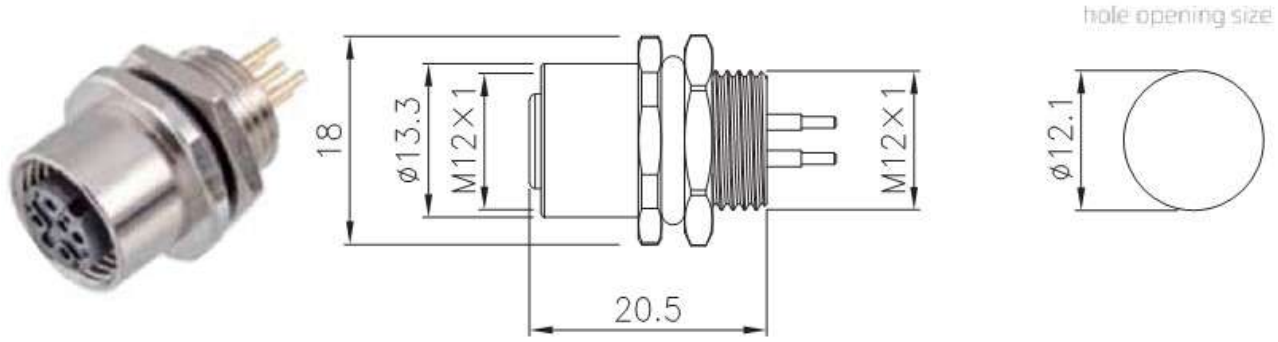

Receptacles, M12 type, metal shell, male contacts, back mount, solder

Part number:

120061-04A 0 00000
120061-05A 0 00000
120061-08A 0 00000
120061-05B 0 00000
120061-04D 0 00000

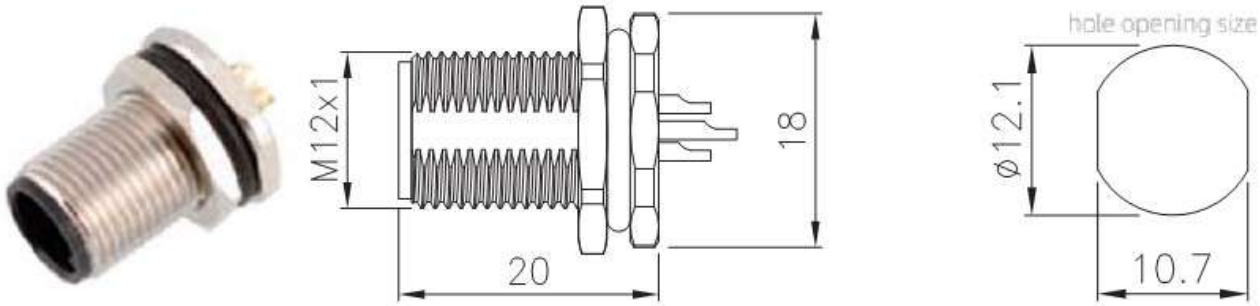

Receptacles, M12 type, metal shell, female contacts, back mount, solder

Part number:

120075-04A 0 00000
120075-05A 0 00000
120075-08A 0 00000
120075-05B 0 00000
120075-04D 0 00000

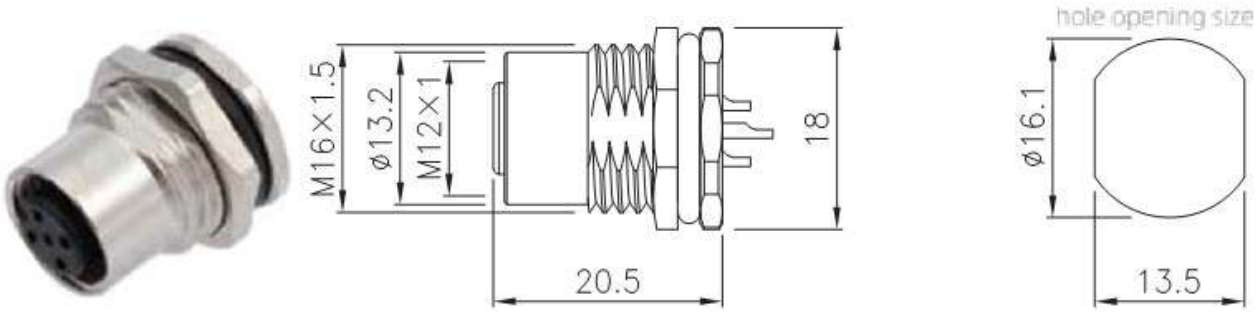

Receptacles, M12 type, metal shell, male contacts, back mount, Straight PCB

Part number:

120067-04A 0 00000
120067-05A 0 00000
120067-08A 0 00000
120067-05B 0 00000
120067-04D 0 00000

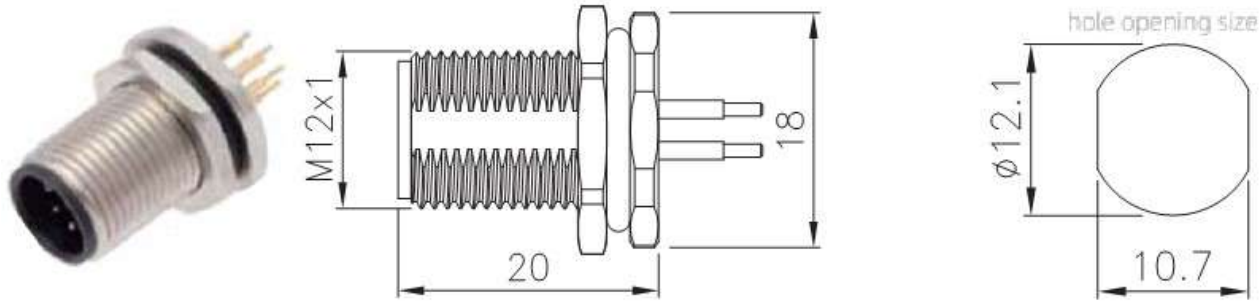

Receptacles, M12 type, metal shell, female contacts, back mount, Straight PCB

Part number:

120079-04A 0 00000
120079-05A 0 00000
120079-08A 0 00000
120079-05B 0 00000
120079-04D 0 00000

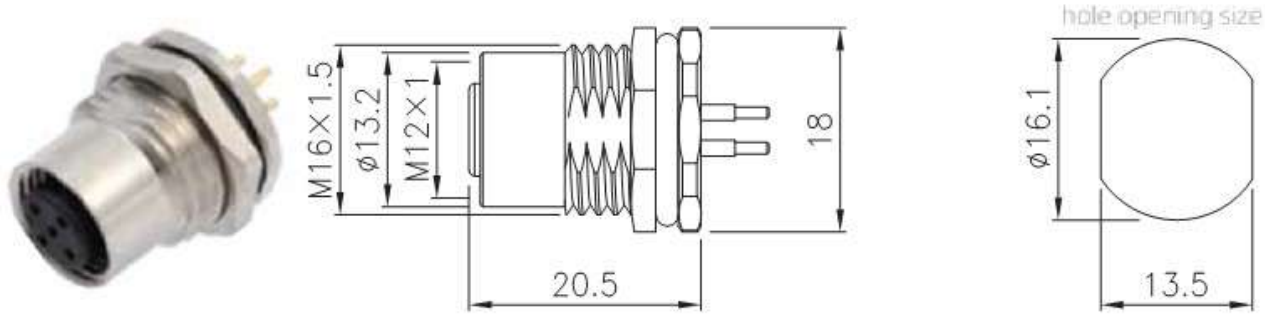

Receptacles, M12 type, metal shell, male contacts, back mount, Straight PCB, Graunded type

Part number:

120070-04A 0 00000
120070-05A 0 00000
120070-08A 0 00000
120070-05B 0 00000
120070-04D 0 00000

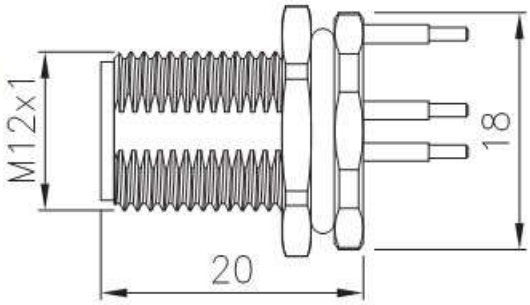

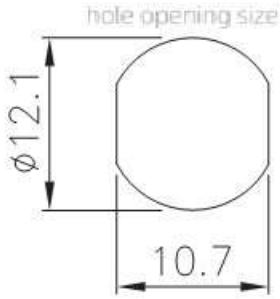

Receptacles, M12 type, metal shell, female contacts, back mount, Straight PCB, Graunded type

Part number:

120081-04A 0 00000
120081-05A 0 00000
120081-08A 0 00000
120081-05B 0 00000
120081-04D 0 00000

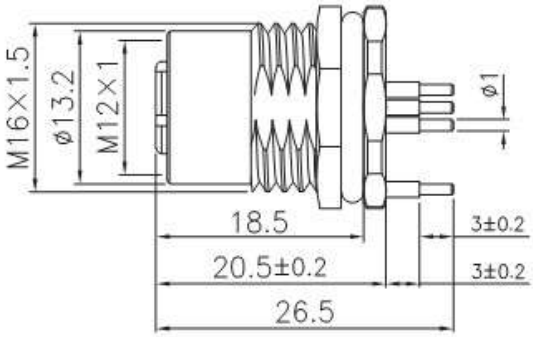

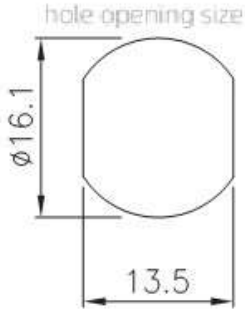

Receptacles, M12 type, metal shell, male contacts, back mount, Angled PCB, Graunded type

Part number:

120088-04A 0 00000
120088-05A 0 00000
120088-08A 0 00000
120088-05B 0 00000
120088-04D 0 00000

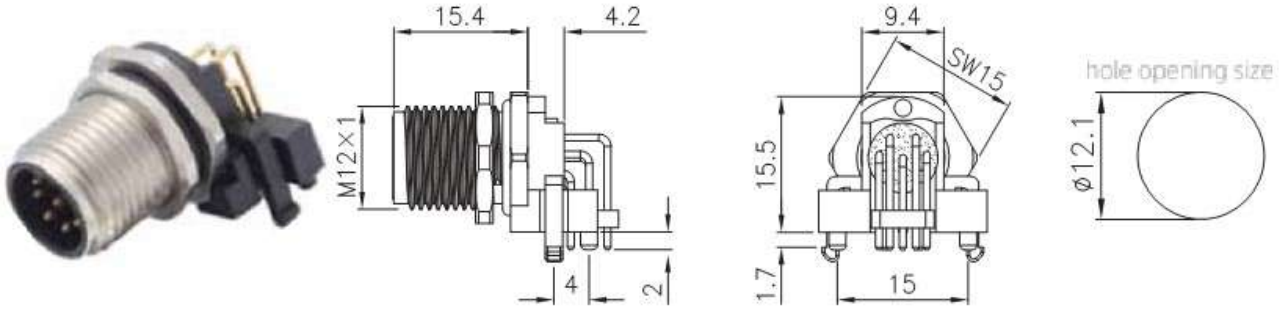

Receptacles, M12 type, metal shell, female contacts, back mount, Angled PCB, Graunded type

Part number:

120090-04A 0 00000
120090-05A 0 00000
120090-08A 0 00000
120090-05B 0 00000
120090-04D 0 00000

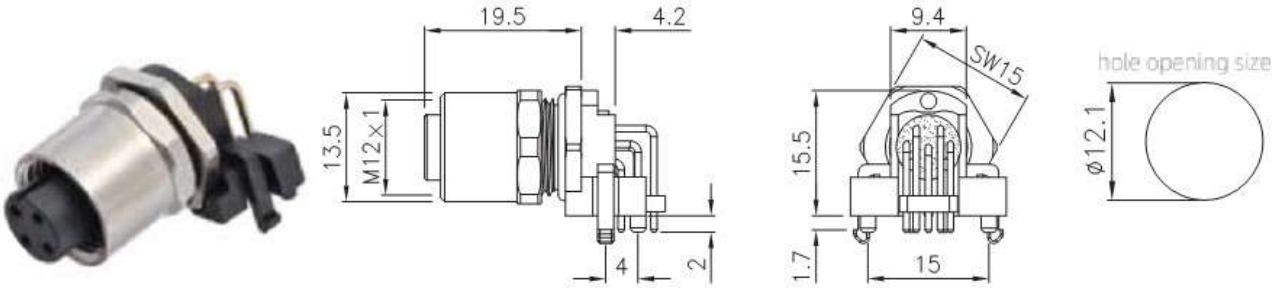

Plugs, M12 type, metal shell, male contacts, with Straight backshell
Part number: 120113-08X 0 00000

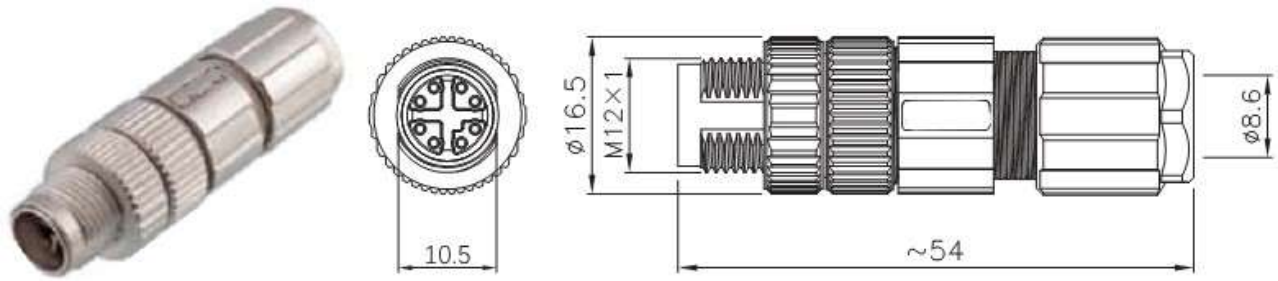

Plugs, M12 type, metal shell, female contacts, with Straight backshell
Part number: 120114-08X 0 00000

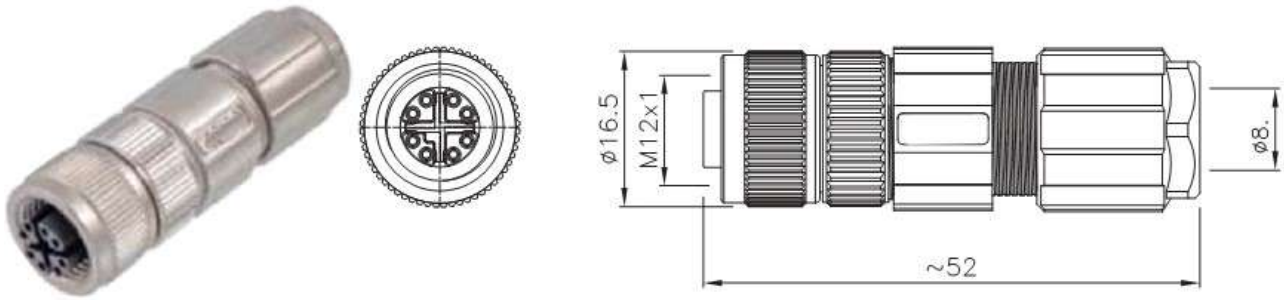

Plugs, M12 type, metal shell, male contacts, with Ebow backshell
Part number: 120115-08X 0 00000

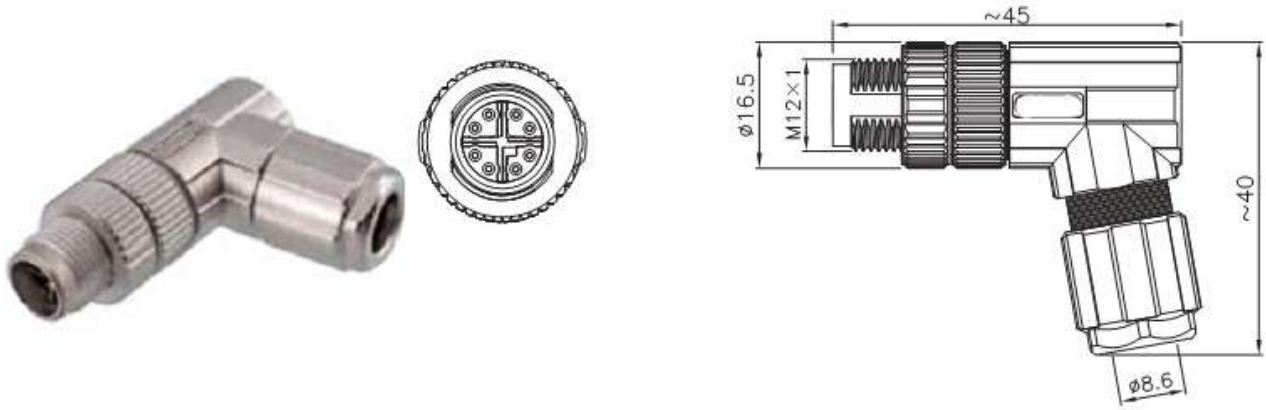

Plugs, M12 type, metal shell, female contacts, with Ebow backshell
Part number: 120116-08X 0 00000

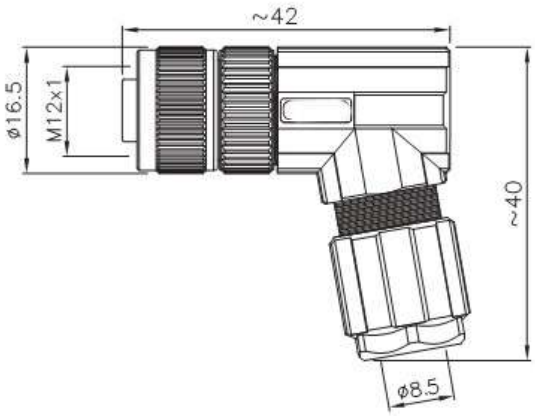

Receptacles, M12 type, metal shell, female contacts, front mount, solder
Part number: 120121-08X 0 00000

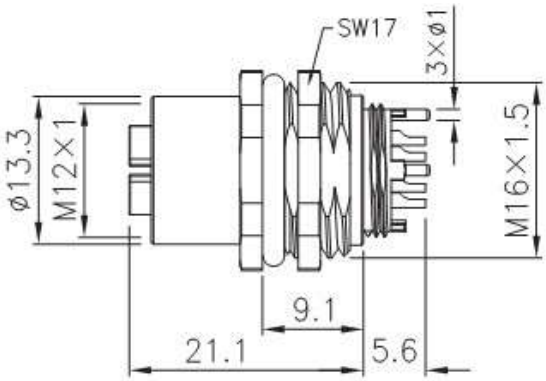

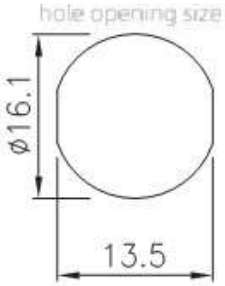

Receptacles, M12 type, metal shell, female contacts, front mount, Straight PCB
Part number: 120122-08X 0 00000

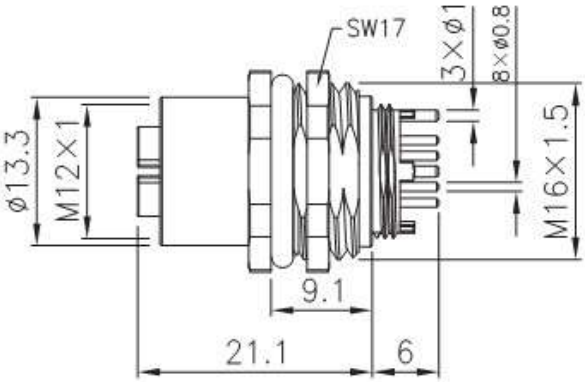

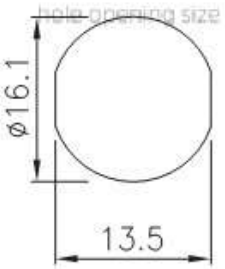

Receptacles, M12 type, metal shell, female contacts, back mount, solder
Part number: 120123-08X 0 00000

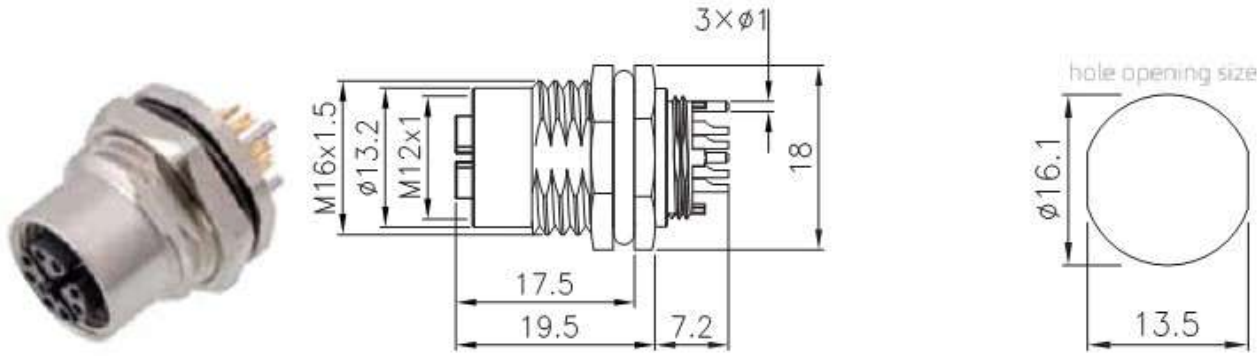

Receptacles, M12 type, metal shell, female contacts, back mount, Straight PCB, Graunded type
Part number: 120125-08X 0 00000

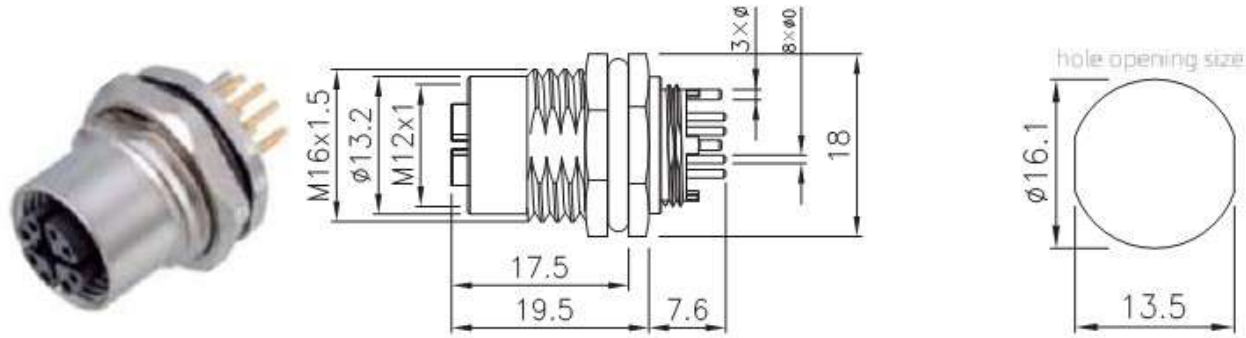

Receptacles, M12 type, metal shell, male contacts, back mount, Angled PCB, Graunded type
Part number: 120127-08X 0 00000

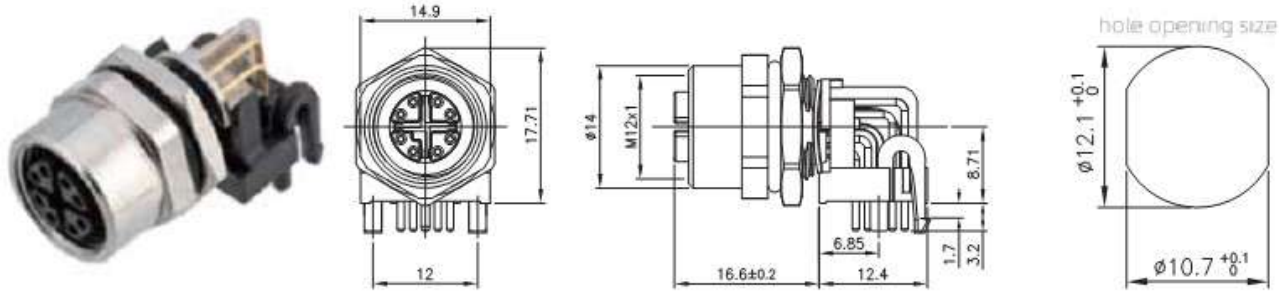

Dust Cover

Plastic Cover for connectors M8 type with male contacts		
View	**Ring inner diameter**	**Part Number**
	7.5 mm	**080059-000000001**
Plastic Cover for connectors M8 type with female contacts		
View	**Ring inner diameter**	**Part Number**
	7.5 mm	**080060-000000001**
	not	**080063-000000001**
Metal Cover for connectors M8 type with male contacts		
View	**Ring inner diameter**	**Part Number**
	8 mm	**080061-000000001**
	10 mm	**080061-000000002**
Metal Cover for connectors M8 type with female contacts		
	8 mm	**080062-000000001**
	10 mm	**080062-000000002**

Plastic Cover for connectors M12 type with male contacts		
View	**Ring inner diameter**	**Part Number**
	3 mm	120109-000000001
	11,5 mm	120109-000000002
	13 mm	120109-000000003
	15 mm	120109-000000004
Plastic Cover for connectors M8 type with female contacts		
View	**Ring inner diameter**	**Part Number**
	3 mm	120110-000000001
	11,5 mm	120110-000000002
	13 mm	120110-000000003
	15 mm	120110-000000004
	not	120165-000000001
Metal Cover for connectors M12 type with male contacts		
View	**Ring inner diameter**	**Part Number**
	3 mm	120111-000000001
	12 mm	120111-000000002
	16 mm	120111-000000003
Metal Cover for connectors M12 type with female contacts		
	3 mm	120112-000000001
	12 mm	120112-000000002
	16 mm	120112-000000003

Network Buses. Wiring Diagram

Ethernet

Description	Values
Connectors	M8 (04A)/RJ45
Data transmission	100 Mbps
Network segment length	up to 100 m from hub/switch to termination resistor
Wiring standards	ISO/IEC 24702

Pin assignment	Pin interface		Color code
	RJ45	M8 (04A)	
		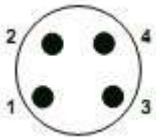	
TD+	1	1	
TD-	2	4	
RD+	3	2	white
RD-	6	3	

Description	Values
Connectors	M12 (04D)/RJ45
Data transmission	100 Mbps
Network segment length	up to 100 m from hub/switch to termination resistor
Wiring standards	ISO/IEC 24702

Pin assignment	Pin interface		Color code
	RJ45	M12 (04D)	
		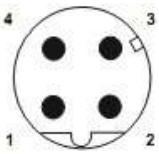	
TD+	1	1	white
TD-	2	3	
RD+	3	2	white
RD-	6	4	

Description	Values
Connectors	M12 (08A)/RJ45
Data transmission	1 Gbps
Network segment length	up to 100 m from hub/switch to termination resistor
Wiring standards	ISO/IEC 24702

Pin assignment	Pin interface		Color code
	RJ45	M12 (08A)	
		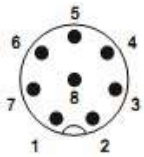	
D1+	1	6	white
D1-	2	4	
D3-	5	1	white
D3+	4	7	
D2+	3	5	white
D2-	6	8	
D4+	7	2	white
D4-	8	3	

Description	Values
Connectors	M12 (08X)/RJ45
Data transmission	10 Gbps
Network segment length	up to 100 m from hub/switch to termination resistor
Wiring standards	ISO/IEC 24702

Pin assignment	Pin interface		Color code
	RJ45	M12 (08X)	
		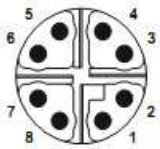	
D1+	1	1	white
D1-	2	2	
D3-	5	7	white
D3+	4	8	
D2+	3	3	white
D2-	6	4	
D4+	7	5	white
D4-	8	6	

DeviceNet™

Description	Values
Connectors	M12 (05A)/D Sub (9)
Data transmission	500 KBaud
Network segment length	up to 500 m
Wiring standards	IEC 61158, IEC 61784-1 CPF 2/3

Pin assignment	Pin interface		Color code
	D Sub (9)	M12 (05A)	
	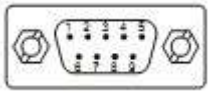	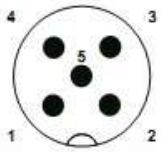	
CAN_L	2	5	
CAN_H	7	4	white
V+	9	2	
V-	3	3	
Drain	4	1	Shield Pin

CANopen®

Description	Values
Connectors	M12 (05A)/D Sub (9)/RJ45
Data transmission	up 10 KBaud to 1 MBaud
Network segment length	According to the transmission speed, the maximum length is 1000 m; if equipped with a repeater, the length can be extended
Wiring standards	EN 50325-4

Pin assignment	Pin interface			Color code
	D Sub (9)	RJ45	M12 (05A)	
	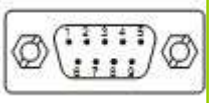		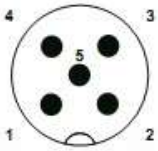	
CAN_L	2	2	5	
CAN_H	7	1	4	white
V+	9	8	2	
V-	3	3	3	
Drain	4	6	1	Shield Pin

ProfiBUS DP

Description	Values
Connectors	M12 (05B)/D Sub (9)
Data transmission	12 Mbps
Network segment length	Copper cable installation up to 1200 m, fiber optic cable installation up to 15 km
Wiring standards	IEC 61158 / IEC 61784

Pin assignment	Pin interface		Color code
	D Sub (9)	M12 (05B)	
	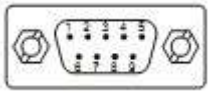	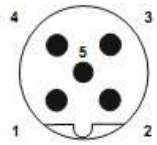	
A cable	8	2	
B cable	3	4	
			Shield housing

EtherCAT, PROFINET, Sercos III

Description	Values
Connectors	M12 (04D)/RJ45
Data transmission	100 Mbps
Network segment length	up to 100 m from hub/switch to termination resistor
Wiring standards	IEC 61784-5-3

Pin assignment	Pin interface		Color code
	RJ45	M12 (04D)	
		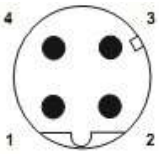	
TD+	1	1	
TD-	2	3	
RD+	3	2	white
RD-	6	4	

CC-Link

Description	Values
Connectors	M12 (04A)
Data transmission	10 Mbps
Network segment length	The longest length is 1,200 m. If equipped with a repeater, it can be extended to 13.2 km
Wiring standards	IEC 61784-1 CPF 8

Pin assignment	Pin interface	Color code
	M12 (04A)	
	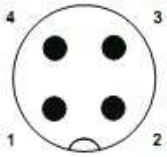	
SLD	1	shield
DS	2	white
DG	3	
DA	4	

INTERBUS

Description	Values
Connectors	M12 (05B)/D Sub (9)
Data transmission	up 500 Kbps to 16 Mbps, depending on segment length
Network segment length	The length of the network segment between equipment is 400 m; the total length is 13 km
Wiring standards	IEC 61158

Pin assignment	Pin interface		Color code
	D Sub (9)	M12 (05B)	
	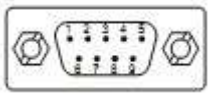	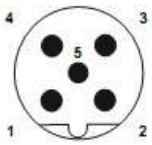	
DO	1	1	
DO	6	2	
DI	2	3	
DI	7	4	
COM	3	5	
NC			white
			Shield housing

Cable Assemblies. Ethernet

Connectors RJ45 type & M8 type (04A)

Ordering information	1010101	/001	/1
Patchcord cable/Terminus Combination Code			
Cable type: 001: PVC, 4C x 22 AWG, CAT5E, Green, fixed use 002: PU, 4C x 22 AWG, CAT5E, Green, fixed use 003: PU, 4C x 26 AWG, CAT5E, Green, used for drag chain			
Cable Assembly Length (in m), 100 m Max			

Patchcord cable/Terminus Combination Code

M8(04A)/RJ45	Plug, Plastic shell, male contacts, with Straight backshell	Plug, Plastic shell, male contacts, with Ebow backshell	Plug, Plastic shell, female contacts, with Straight backshell	Plug, Plastic shell, female contacts, with Ebow backshell	Plug, metal shell, male contacts, with Straight backshell	Plug, metal shell, female contacts, with Straight backshell
OPEN	1010101	1010102	1010103	1010104	1010105	1010106
Plug, Plastic shell, male contacts, with Straight backshell	1010107	1010108	1010109	1010110		
Plug, Plastic shell, male contacts, with Ebow backshell		1010112	1010113	1010114		
Plug, metal shell, male contacts, with Straight backshell					1010115	1010116
Straight Plug RJ45, Plastic shell	1010117	1010118	1010119	1010120	1010121	1010122
Angled Plug RJ45, Plastic shell	1010123	1010124	1010125	1010126	1010127	1010128
Straight Receptacle RJ45, Plastic shell	1010129	1010130	1010131	1010132	1010133	1010134

Connectors RJ45 type & M12 type (04D)

Ordering information	1010301	/004	/1
Patchcord cable/Terminus Combination Code			
Cable type: 004: PVC, 2 x 2 x 26 AWG, CAT5E, Light blue, fixed use 005: PVC, 2 x 2 x 26 AWG, CAT5E, Turquoise, for drag chain use			
Cable Assembly Length (in m), 100 m Max			

Patchcord cable/Terminus Combination Code

M12(04D)/RJ45	Plug, Plastic shell, male contacts, with Straight backshell	Plug, Plastic shell, male contacts, with Ebow backshell	Plug, Plastic shell, female contacts, with Straight backshell	Plug, Plastic shell, female contacts, with Ebow backshell	Receptacles, metal shell, female contacts, back mount	Plug, Plastic shell, female contacts, with Straight backshell	Straight Plug RJ45, Plastic shell
OPEN	1010301	1010302	1010303	1010304	1010305	1010306	
Plug, Plastic shell, male contacts, with Straight backshell	1010307	1010308	1010309	1010310			
Plug, Plastic shell, male contacts, with Ebow backshell		1010311	1010312	1010313			
Plug, metal shell, female contacts, with Straight backshell			1010314	1010315			
Plug, Plastic shell, female contacts, with Ebow backshell				1010316			
Straight Plug RJ45, Plastic shell	1010317	1010318	1010319	1010320	1010321	1010322	1010323
Straight Receptacle RJ45, Plastic shell	1010324	1010325	1010326	1010327			

Connectors RJ45 type & M12 type (08A)

Ordering information	1010401	/006	/1
Patchcord cable/Terminus Combination Code			
Cable type: 006: PVC, 4 x 2 x 26 AWG, CAT6A, Black, fixed use 007: PU, 4 x 2 x 26 AWG, CAT6A, Aqua blue, fixed use 008: PVC, 4 x 2 x 26 AWG, CAT6, Dark green, used for drag chain			
Cable Assembly Length (in m), 100 m Max			

Patchcord cable/Terminus Combination Code

M8(04A)/RJ45	Plug, Plastic shell, male contacts, with Straight backshell	Plug, Plastic shell, male contacts, with Ebow backshell	Plug, Plastic shell, female contacts, with Straight backshell	Plug, Plastic shell, female contacts, with Ebow backshell	Receptacles, metal shell, female contacts, back mount	Plug, Plastic shell, female contacts, with Straight backshell
OPEN	1010401	1010402	1010403	1010404	1010405	1010406
Plug, Plastic shell, male contacts, with Straight backshell	1010407	1010408	1010409	1010410		
Plug, Plastic shell, male contacts, with Ebow backshell		1010411	1010412	1010413		
Plug, Plastic shell, female contacts, with Straight backshell			1010414	1010415		
Plug, Plastic shell, female contacts, with Ebow backshell				1010416		
Straight Plug RJ45, Plastic shell	1010417	1010418	1010419	1010420	1010421	1010422
Straight Receptacle RJ45, Plastic shell	1010423	1010424	1010425	1010426		

Connectors RJ45 type & M12 type (08X)

Ordering information	1010501	/006	/1
Patchcord cable/Terminus Combination Code			
Cable type: 006: PVC, 4 x 2 x 26 AWG, CAT6A, Black, fixed use 007: PU, 4 x 2 x 26 AWG, CAT6A, Aqua blue, fixed use 008: PVC, 4 x 2 x 26 AWG, CAT6, Dark green, used for drag chain			
Cable Assembly Length (in m), 100 m Max			

Patchcord cable/Terminus Combination Code

M12(08X)/RJ45	Plug, Plastic shell, male contacts, with Straight backshell	Plug, Plastic shell, male contacts, with Ebow backshell	Plug, Plastic shell, female contacts, with Straight backshell	Receptacles, metal shell, female contacts, back mount	Plug, Plastic shell, female contacts, with Straight backshell	Straight Plug RJ45, Plastic shell
OPEN	1010501	1010502	1010503	1010504	1010505	
Plug, Plastic shell, male contacts, with Straight backshell	1010506	1010507	1010508			
Plug, Plastic shell, male contacts, with Ebow backshell		1010509	1010510			
Straight Plug RJ45, Plastic shell	1010511	1010512	1010513	1010514	1010515	1010516
Straight Receptacle RJ45, Plastic shell	1010517	1010518	1010519			

Cable Assemblies. DeviceNet™, CANopen®

Connectors D Sub type & M12 type (05A)

Ordering information	1030201	/011	/1
Patchcord cable/Terminus Combination Code			
Cable type: 011: PVC, 1 x 2 x 22 AWG+1 x 2 x 24 AWG, Purple, fixed installation 012: PU, 1 x 2 x 22 AWG+1 x 2 x 24 AWG, Purple, fixed use			
Cable Assembly Length (in m), 100 m Max			

Patchcord cable/Terminus Combination Code

M12(05A)/ D Sub	OPEN	Plug, Plastic shell, male contacts, with Straight backshell	Plug, Plastic shell, male contacts, with Ebow backshell	Receptacles, metal shell, female contacts, back mount	D Sub, Plug, with Straight backshell	D Sub, Receptacle, with Straight backshell
OPEN		1030201	1030202	1030203		
Plug, Plastic shell, female contacts, with Straight backshell	1030204	1030205	1030206		1030207	1030208
Plug, Plastic shell, female contacts, with Ebow backshell	1030209	1030210	1030211		1030212	1030213
Receptacles, metal shell, female contacts, back mount	1030214				1030215	1030216

Cable Assemblies. ProfiBUS DP

Connectors D Sub type & M12 type (05B)

Ordering information	1040101	/014	/1
Patchcord cable/Terminus Combination Code			
Cable type: 014: PVC, 1 x 2 x 22 AWG, Purple, fixed installation			
Cable Assembly Length (in m), 100 m Max			

Patchcord cable/Terminus Combination Code

M12(05B)/ D Sub	OPEN	Plug, Plastic shell, male contacts, with Straight backshell	Plug, Plastic shell, male contacts, with Ebow backshell	D Sub, Plug, with Straight backshell	D Sub, Receptacle, with Straight backshell
OPEN		1040101	1040102		
Plug, Plastic shell, female contacts, with Straight backshell	1040103	1040104	1040105	1040106	1040107
Plug, Plastic shell, female contacts, with Ebow backshell	1040108	1040109	1040110	1040111	1040112

Cable Assemblies. EtherCAT, PROFINET, Sercos III

Connectors RJ45 type & M12 type (04D)

Ordering information	1020101	/002	/1
Patchcord cable/Terminus Combination Code			
Cable type: 001: PVC, 4C x 22 AWG, CAT5E, Green, fixed use 002: PU, 4C x 22 AWG, CAT5E, Green, fixed use 010: PVC, 2 x 2 x 22 AWG, CAT5E, Dark green, used for drag chain			
Cable Assembly Length (in m), 100 m Max			

Patchcord cable/Terminus Combination Code

M12(04D)/RJ45	Plug, Plastic shell, male contacts, with Straight backshell	Plug, Plastic shell, male contacts, with Ebow backshell	Plug, Plastic shell, female contacts, with Straight backshell	Plug, Plastic shell, female contacts, with Ebow backshell	Receptacles, metal shell, female contacts, back mount	Plug, Plastic shell, female contacts, with Straight backshell	Straight Plug RJ45, Plastic shell
OPEN	1020101	1020102	1020103	1020104	1020105	1020106	
Plug, Plastic shell, male contacts, with Straight backshell	1020107	1020108	1020109	1020110			
Plug, Plastic shell, male contacts, with Ebow backshell		1020111	1020112	1020113			
Plug, metal shell, female contacts, with Straight backshell			1020114	1020115			
Plug, Plastic shell, female contacts, with Ebow backshell				1020116			
Straight Plug RJ45, Plastic shell	1020117	1020118	1020119	1020120	1020121	1020122	1020123
Angled Plug RJ45, Plastic shell	1020124	1020125	1020126	1020127	1020128	1020129	
Straight Receptacle RJ45, Plastic shell	1020130	1020131	1020132	1020133	1020134	1020135	

Cable Assemblies. CC-Link

Connectors M12 type (04A)

Ordering information	1050101	/015	/1
Patchcord cable/Terminus Combination Code			
Cable type: 015: PVC, 3 x 20 AWG, Red, fixed installation			
Cable Assembly Length (in m), 100 m Max			

Patchcord cable/Terminus Combination Code

M12(4A)	OPEN	Plug, Plastic shell, male contacts, with Straight backshell	Receptacles, metal shell, female contacts, back mount
OPEN		1050101	1050102
Plug, Plastic shell, female contacts, with Straight backshell 	1050103	1050104	

Cable Assemblies. INTERBUS

Connectors D Sub type & M12 type (05B)

Ordering information	1060101	/015	/1
Patchcord cable/Terminus Combination Code			
Cable type: 016: PVC, 3 x 2 x 24 AWG, Green, fixed installation			
Cable Assembly Length (in m), 100 m Max			

Patchcord cable/Terminus Combination Code

M12(05B)/ D Sub	OPEN	Plug, Plastic shell, male contacts, with Straight backshell	Plug, Plastic shell, male contacts, with Ebow backshell	Receptacles, metal shell, male contacts, back mount	Receptacles, metal shell, female contacts, back mount	D Sub, Plug, with Straight backshell	D Sub, Receptacle, with Straight backshell
OPEN		1060101	1060102	1060103	1060104		
Plug, metal shell, female contacts, with Straight backshell	1060105	1060106	1060107			1060108	1060109
Plug, Plastic shell, female contacts, with Ebow backshell	1060110	1060111	1060112			1060113	1060114

Cable Types, Descriptions

Cable Code	001	002	003	004
Cross Section				
Application	PROFINET cables for fixed installation	PROFINET cable for fixed installation	PROFINET cable for fixed installation	Cables for fixed installation
Conductor	Tinned copper stranded wire 7 x 0.25 mm, HDPE insulated core wire Ø 1.55 ± 0.1 mm	Tinned copper stranded wire 7 x 0.25 mm, HDPE insulated core wire Ø 1.55 ± 0.1 mm	Bare copper stranded wire 19 x 0.1 mm, PP insulated core wire Ø 1.20 ± 0.05 mm	Tinned copper stranded wire 7 x 0.16 mm, HDPE insulated core wire Ø 1.00 ± 0.05 mm
Wire	4 x 22 AWG, centered on the filling, 4 wires twisted into a quad	4 x 22 AWG, centered on the filling, 4 wires twisted into a quad	4 x 26 AWG, centered on the filling, 4 wires twisted into a quad	2 x 2 x 26 AWG, 2 wires twisted into pairs, 2 pairs of shares
Shield	Aluminum foil package Tinned copper wire braided shield	Aluminum foil package Tinned copper wire braided shield	Aluminum foil package Tinned copper wire braided shield	Aluminum foil package Tinned copper wire braided shield
Jacket	Green, PVC, Ø 6.5 ± 0.3 mm	Green, PU, Ø 6.5 ± 0.3 mm	Green, PU, Ø 5.4 ± 0.2 mm	Light blue, PVC, Ø 6.0 ± 0.2 mm
Technical Parameters	Rated voltage: 600 V Rated temperature: -40°C ~ +80°C	Rated voltage: 300 V Rated temperature: -20°C ~ +80°C	Rated voltage: 30 V Rated temperature: -20°C ~ +80°C Minimum bending radius: 10 x diameter Drag chain speed: 120 m/min Drag chain times: 5,000,000 times	Rated voltage: 30 V Rated temperature: -20°C ~ +80°C
UL AWM	UL 21694	UL 20233	–	–
Characteristic	Transmission performance complies with CAT5E Flame retardant performance complies with UL1581 FT2	Transmission performance complies with CAT5E Flame retardant performance complies with UL1581 FT2 Halogen-free	Transmission performance complies with CAT5E Halogen-free	Transmission performance complies with CAT5E
Model	4C22-014	4C22-016	4C26-004	2P26-001

Cable Code	005	006	007	008
Cross Section				
Application	Cables for fixed installation	Cables for fixed installation	Cables for fixed installation	Cables for drag chain installation
Conductor	Tinned copper stranded wire 30 x 0.08 mm, HDPE insulated core wire Ø 1.00 ± 0.05 mm	Bare copper stranded wire 7 x 0.16 mm, HDPE insulated core wire Ø 1.02 ± 0.05 mm	Bare copper stranded wire 7 x 0.154 mm, Foam PE insulated core wire Ø 1.05 ± 0.08 mm	Bare copper stranded wire 19 x 0.1 mm, HDPE insulated core wire Ø 0.95 ± 0.05 mm
Wire	2 x 2 x 26 AWG, 2 wires twisted into pairs, 2 pairs of shares	4 x 2 x 26 AWG, 2 wires twisted into pairs, Aluminum foil shielding for each pair, 4 pairs of shares	4 x 2 x 26 AWG, 2 wires twisted into pairs, Aluminum foil shielding for each pair, 4 pairs of shares	4 x 2 x 26 AWG, 2 wires twisted into pairs, 4 pairs of shares
Shield	Aluminum foil package Tinned copper wire braided shield	Aluminum foil package Tinned copper wire braided shield	Aluminum foil package Tinned copper wire braided shield	Aluminum foil package Tinned copper wire braided shield
Jacket	Turquoise, PVC, Ø 6.5 ± 0.2 mm	Black, PVC, Ø 6.5 ± 0.3 mm	Aqua blue, PU, Ø 6.6 ± 0.3 mm	Dark green, PVC, Ø 6.5 ± 0.2 mm
Technical Parameters	Rated voltage: 30 V Rated temperature: -20°C ~ +105°C Minimum bending radius: 7.5 x diameter Drag chain speed: 120 m/min Drag chain times: 10,000,000 times	Rated voltage: 30 V Rated temperature: -20°C ~ +60°C	Rated voltage: 30 V Rated temperature: -20°C ~ +80°C	Rated voltage: 30 V Rated temperature: -20°C ~ +105°C Minimum bending radius: 7.5 x diameter Drag chain speed: 120 m/min Drag chain times: 5,000,000 times
UL AWM	–	–	UL 20236	–
Characteristic	Transmission performance complies with CAT5E	Transmission performance complies with CAT6A Flame retardant performance complies with UL1581 FT2	Transmission performance complies with CAT6A Flame retardant performance complies with UL1581 FT2	Transmission performance complies with CAT6
Model	2P0.14-001	4P26-006	4P26-001	4P26-009

Cable Code	009	010	011	012
Cross Section				
Application	Cables for fixed installation	Cables for drag chain installation	Cables for fixed installation	Cables for fixed installation
Conductor	power cable: Tinned copper stranded wire 41 x 0.16 mm, SR-PVC insulated core wire Ø 1.7 ± 0.1 mm Data cable: bare copper stranded wire 7 x 0.16 mm, HDPE insulated core wire Ø 0.95 ± 0.05mm	Bare copper stranded wire 19 x 0.15 mm, PE insulated core wire Ø 1.25 ± 0.05 mm	Power cable: Tinned copper stranded wire 30 x 0.12 mm, HDPE insulated core wire Ø 1.4 ± 0.05 mm Data cable: Tinned copper stranded wire 19 x 0.127 mm, FPE insulated core wire Ø 2.0 ± 0.1 mm	Power cable: Tinned copper stranded wire 17 x 0.16 mm, HDPE insulated core wire Ø 1.4 ± 0.05 mm Data cable: Tinned copper stranded wire 19 x 0.127 mm, FPE insulated core wire Ø 1.95 ± 0.05 mm
Wire	2 x 2 x 26 AWG + 4 x 18 AWG, 4 parallel lines, 2 wire stranded wire, Stranded wire individually foil braided shield	2 x 2 x 22 AWG, 2 wires twisted into pairs, 2 pairs of shares	2 x 2 x 22 AWG + 2 x 2 x 24 AWG, Stranded tinned copper drain wire 1 pair of data lines 1 pair Power cord	2 x 2 x 22 AWG + 2 x 2 x 24 AWG, Stranded tinned copper drain wire 1 pair of data lines 1 pair Power cord
Shield	Aluminum foil package Tinned copper wire braided shield	Aluminum foil package Tinned copper wire braided shield	Aluminum foil package Tinned copper wire braided shield	Aluminum foil package Tinned copper wire braided shield
Jacket	Black, PVC, Ø 8.8 ± 0.3 mm	Dark green, PVC, Ø 6.4 ± 0.2 mm	Purple, PU, Ø 6.7 ± 0.3 mm	Purple, PVC, Ø 6.7 ± 0.3 mm
Technical Parameters	Rated voltage: 30 V Rated temperature: -20°C ~ +80°C	Rated voltage: 30 V Rated temperature: -20°C ~ +80°C Minimum bending radius: 7.5 x diameter Drag chain speed: 120 m/min Drag chain times: 10,000,000 times	Rated voltage: 30 V Rated temperature: -20°C ~ +80°C	Rated voltage: 30 V Rated temperature: -20°C ~ +80°C
UL AWM	–	–	UL 20236	UL 20276
Characteristic	Transmission performance complies with CAT5E	Transmission performance complies with CAT5E Flame retardant performance complies with UL1581 FT1	Flame retardant performance complies with UL1581 FT2	Flame retardant performance complies with VW-1
Model	2P26+4C18-001	2P22-001	1P22+1P24-002	1P22+1P24-001

Cable Code	013	014	015	016
Cross Section				
Application	Cables for fixed installation	Cables for fixed installation	Cables for fixed installation	Cables for fixed installation
Conductor	Power cable: Tinned copper stranded wire 33 x 0.254 mm, HDPE insulated core wire Ø 2.4 ± 0.1 mm Data cable: Tinned copper stranded wire 41 x 0.16 mm, FPE insulated core wire Ø 3.6 ± 0.1 mm	Bare copper stranded wire 17 x 0.1 6mm, Foam PE insulated core wire Ø 2.55 ± 0.1 mm	Bare copper stranded wire 7 x 0.32 mm, Foam PE insulated core wire Ø 2.2 ± 0.05 mm	Bare copper stranded wire 11 x 0.16 mm, PE insulated core wire Ø 1.1 ± 0.05 mm
Wire	2 x 2 x 15 AWG + 2 x 2 x 18 AWG, Stranded tinned copper drain wire 1 pair of data lines 1 pair Power cord	1 x 2 x 22AWG, 2 wires twisted into pairs	3 x 20 AWG, Stranded tinned copper drain wire	3 x 2 x 24 AWG, 2 wires twisted into pairs, 3 pairs into strands
Shield	Aluminum foil package Tinned copper wire braided shield	Aluminum foil package Tinned copper wire braided shield	Aluminum foil package Tinned copper wire braided shield	–
Jacket	Purple, PVC, Ø 8.0 ± 0.3 mm	Red, PVC, Ø 7.7 ± 0.3 mm	Purple, PVC, Ø 10.3 ± 0.3 mm	Green, PVC, Ø 6.5 ± 0.3 mm
Technical Parameters	Rated voltage: 30 V Rated temperature: -20°C ~ +80°C	Rated voltage: 300 V Rated temperature: -20°C ~ +80°C	Rated voltage: 300 V Rated temperature: -20°C ~ +60°C	Rated voltage: 250 V Rated temperature: -20°C ~ +80°C
UL AWM	UL 20276	–	–	–
Characteristic	Flame retardant performance complies with VW-1	–	–	–
Model	–	–	–	–

CÔNG TY TNHH RỒNG VÀNG TECHNOLOGY
Địa chỉ: 48/5 Vĩnh Xuân, Phường Vĩnh thái,
Thành Phố Nha Trang, Tỉnh Khánh Hòa
Sđt: +84 79.219.2707
www.rong-vang-technology.vn