RỒNG VÀNG TECHNOLOGY

RJ45 Connectors
for Harsh Environment

www.rong-vang-technology.vn

Description

High performance ALRJ45 connectors provides ethernet connectivity in harsh environment applications and are designed to meet the requirements of high speed data connections (which can be used to transmit 1G Base-T Ethernet), where reliability, environmental sealing and full ruggedness is required

ALRJB Series

Technical features

Mechanical

Bayonet coupling (MIL-DTL-26482 type, shell size 18)
RJ45 cordset retention in the plug: 80N Max in the axis
RJ45 female retention in the receptacle: 40N Max in the axis
Minimum of 500 mating cycles
Vibrations: 10-500Hz, 10g, 3 axes: no discontinuity >10 ns
Shocks: IK06►weight of 250 g drop from 40 cm onto connectors (mated pair)

Environmental

Temperature range: up -40°C to +85°C
Fire retardant/Low smoke: UL94 V0
Humidity: 21 days, 43°C, 98% humidity
Sealed to IP 68 for fluid and dust laden environments
Salt spray requirement: up to 500 h
Data transmission:

- 10 Base-T, 100 Base-T, and 1G Base-T Ethernet
- High performance connectivity, up to 100 MHz

RJ45 connector details

Contacts: Phosphor Bronze, Gold flash over Nickel
Shielding: Nickel-plated brass
Body: PBT UL 94V-0
PCB: FR4, UL 94V-0 (PCB termination only)
Voltage: 125 VAC rms
Current Rating: 1.5 A
Insulation resistance: ≥ 500MΩ at 500 VDC
Dielectric strength: 1000 VAC rhm 60Hz, 1min
Impedance: 100±15 Ohm

Ordering Information for Plugs

Basic Series	ALRJ-B	-P	-W
Shell type: P – Plug with plastic gland PM – Plug with metallic gland			
Material/Finish: N – Aluminum alloy/Electroless Nickel W – Aluminum alloy/Cadmium Olive Drab Z – Aluminum alloy/Zinc Nickel Black			

Ordering Information for Receptacles

Basic Series	ALRJ-B	-SF	BK	-1	-W
Shell type: SF – Square flange receptacle JN – JamNut receptacle					
Backshell type: Omit – No backshell BKM – Backshell with metallic gland BK – Backshell with plastic gland					
Back terminations: 1 – 2 Female RJ45 2 – RJ45 female + RJ45 male cordset 3 – RJ45 female + RJ45 male cordset open 4 – RJ45 female + open PCB with 8 tinned holes for cable soldering					
Length: L (Type 2 & 3 only): 03 – 0.3 m 05 – 0.5 m 10 – 1.0 m 15 – 1.5 m					
Material/Finish: N – Aluminum alloy/Electroless Nickel W – Aluminum alloy/Cadmium Olive Drab Z – Aluminum alloy/Zinc Nickel Black					
Insert Orientations: A, B, C, D Omit – for supply of RJ45 receptacle + Insert separately					

Back terminations types

Type	View	Description
1	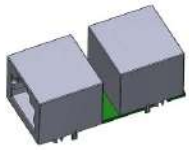	PCB + 2 Female RJ45 connectors
2		PCB + RJ45 female connector + RJ45 male cordset
3	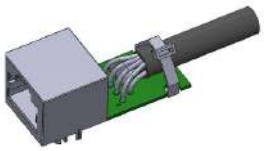	PCB + RJ45 female connector + RJ45 male cordset open end
4	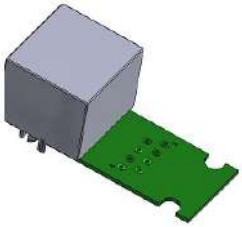	PCB + RJ45 female + Open PCB with 8 tinned holes for cable soldering

Cat.5e per TIA/EIA 568B and Class D per ISO/IEC 11801

PCB Pin Number		T568B Pair	RJ45 Male Pin Number	T568B Pair Color	RJ45 Male
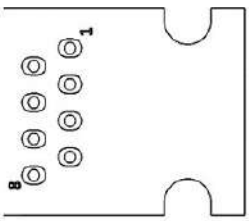	1	2	1	White/Orange	
	2		2	Orange	
	3	3	3	White/Green	
	4	1	4	Blue	
	5		5	White/Blue	
	6	3	6	Green	
	7	4	7	White/Brown	
	8		8	Brown	

Dimensions

Plug with Plastic Gland
ALRJ-B-P-N (W, Z)

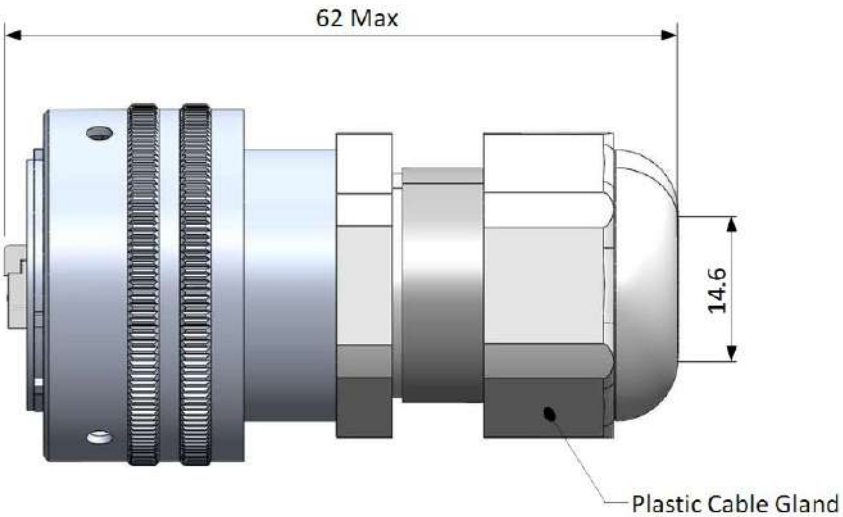

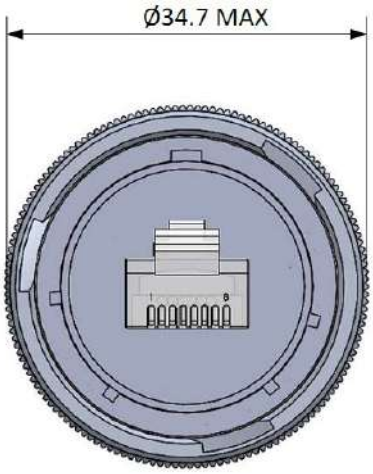

Plug with Metallic Gland
ALRJ-B-PM-N (W, Z)

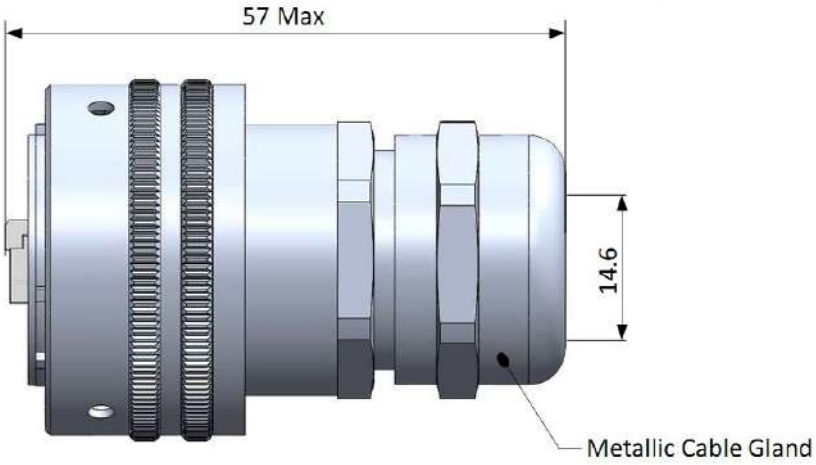

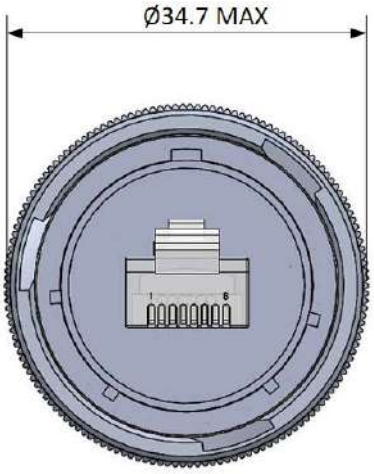

Square Flange Receptacle with 2 Female RJ45
ALRJ-B-SF-1-N (W, Z)

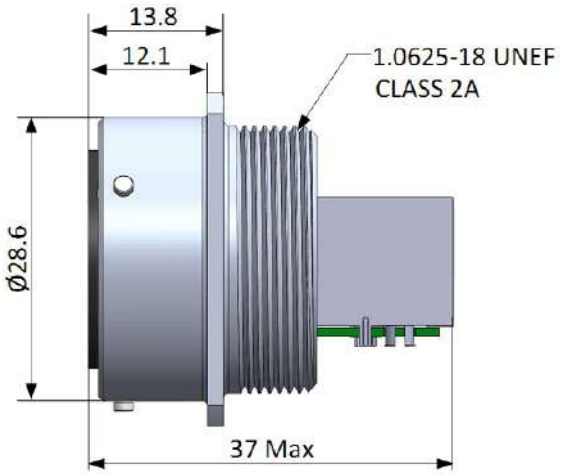

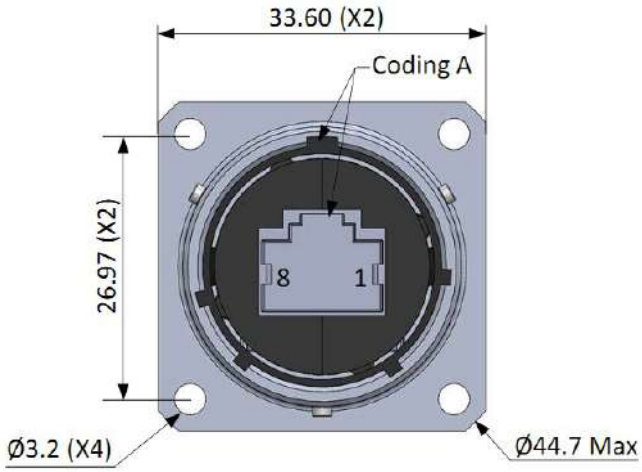

Square Flange Receptacle with RJ45 female + RJ45 male cordset
ALRJ-B-SF-2-03-N (W, Z)

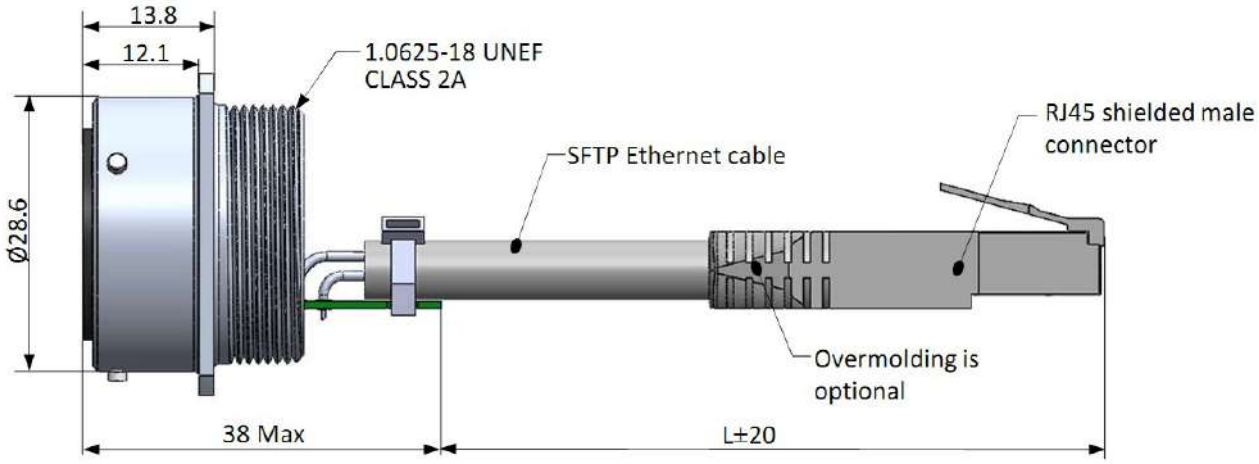

Square Flange Receptacle with RJ45 female + RJ45 male cordset open
ALRJ-B-SF-3-10-N (W, Z)

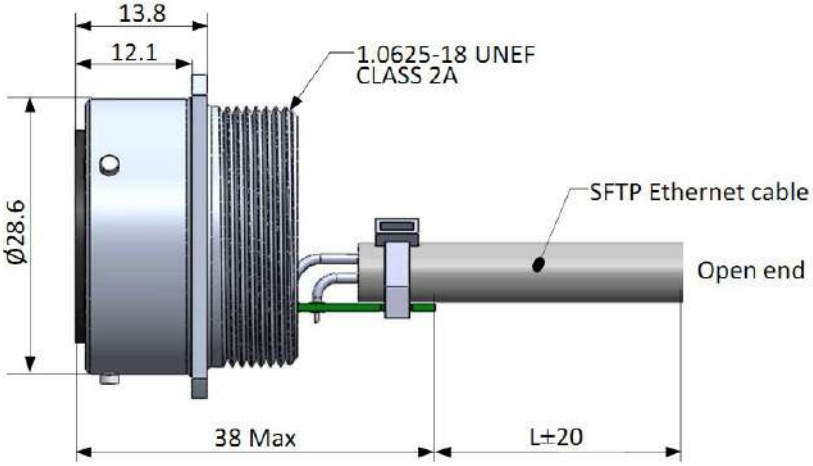

Square Flange Receptacle with RJ45 female + open PCB with 8 tinned holes for cable soldering
ALRJ-B-SF-4-N (W, Z)

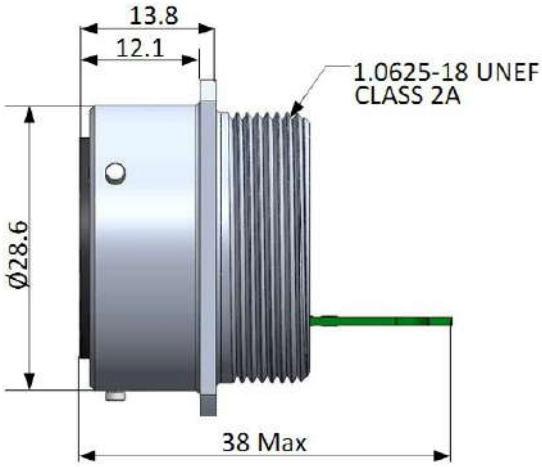

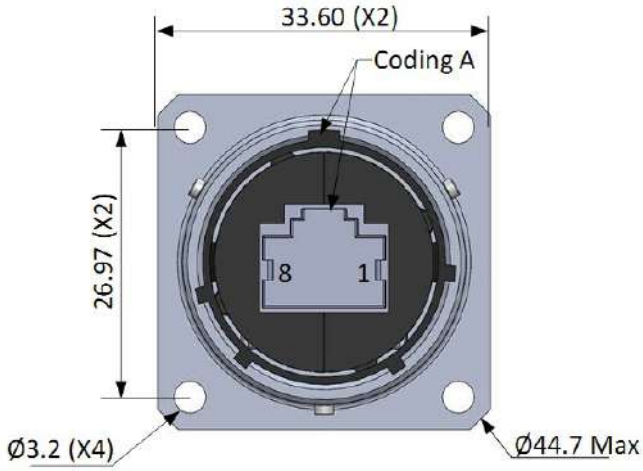

Square Flange Receptacle with 2 Female RJ45 (Backshell with plastic gland)
ALRJ-B-SF-BK-1-N (W, Z)

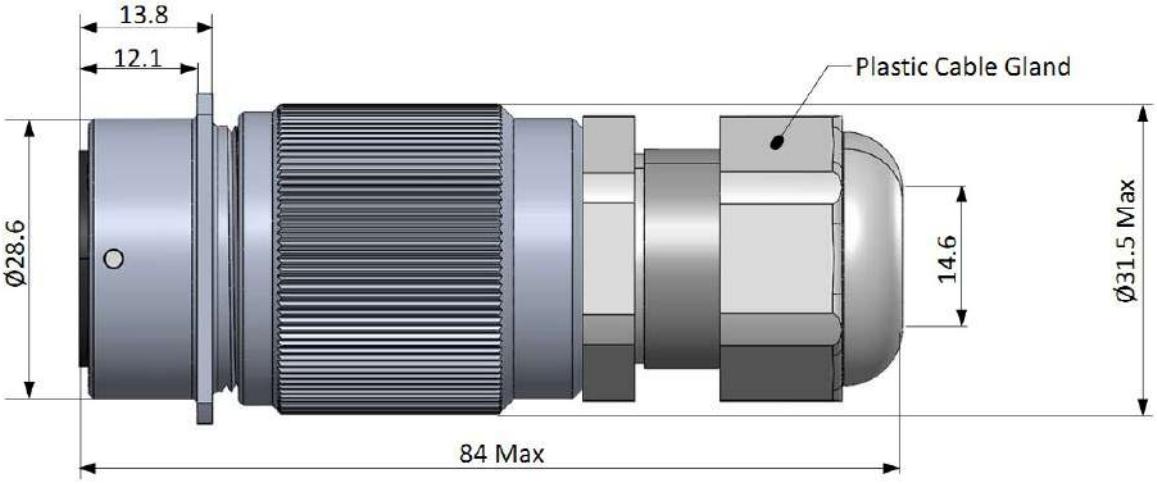

Square Flange Receptacle with 2 Female RJ45 (Backshell with metallic gland)
ALRJ-B-SF-BKM-1-N (W, Z)

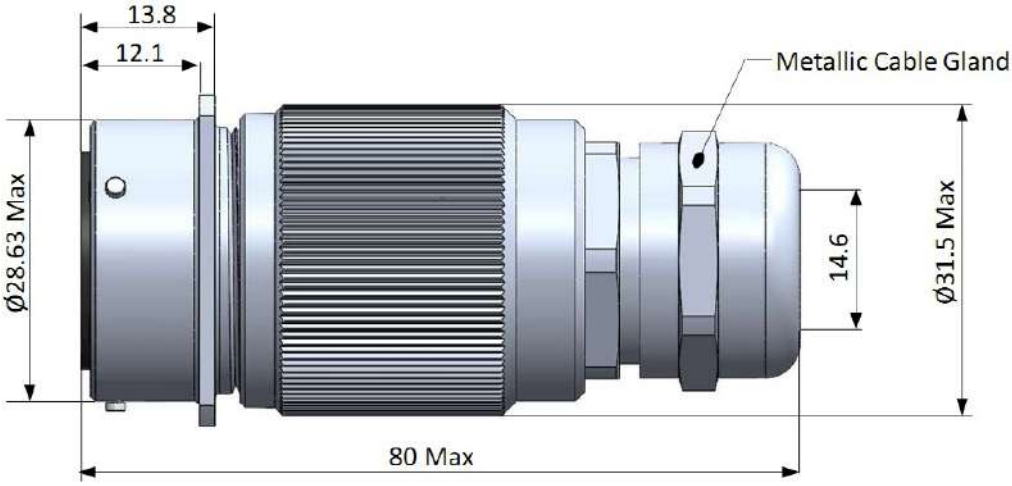

Jam Nut Receptacle with 2 Female RJ45
ALRJ-B-JN-1-N (W, Z)

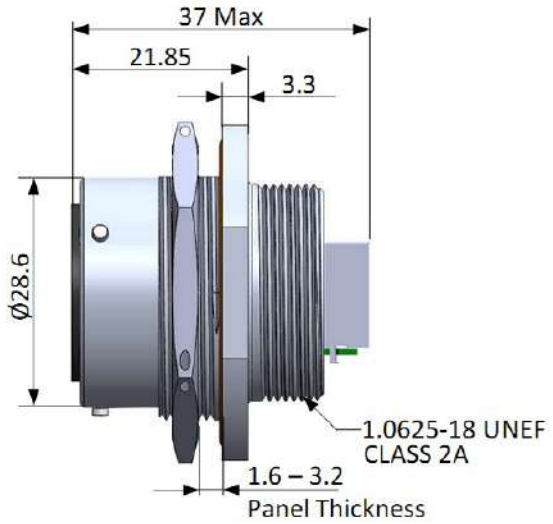

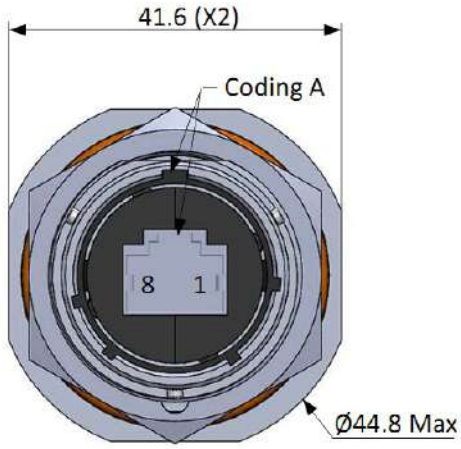

Jam Nut Receptacle with RJ45 female + RJ45 male cordset
ALRJ-B-JN-2-03-N (W, Z)

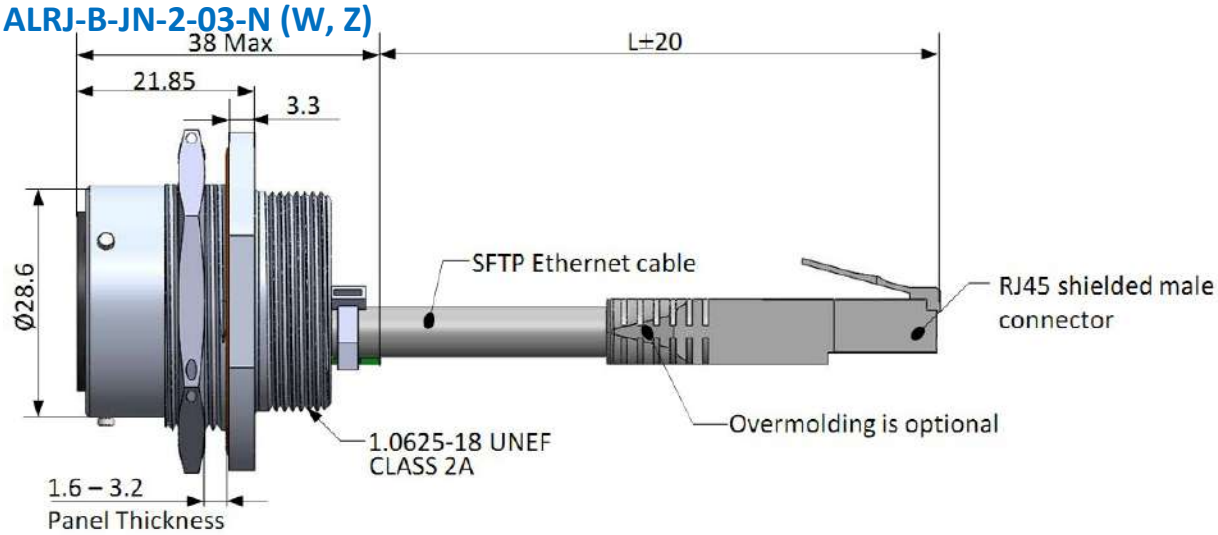

Jam Nut Receptacle with RJ45 female + RJ45 male cordset open
ALRJ-B-JN-3-10-N (W, Z)

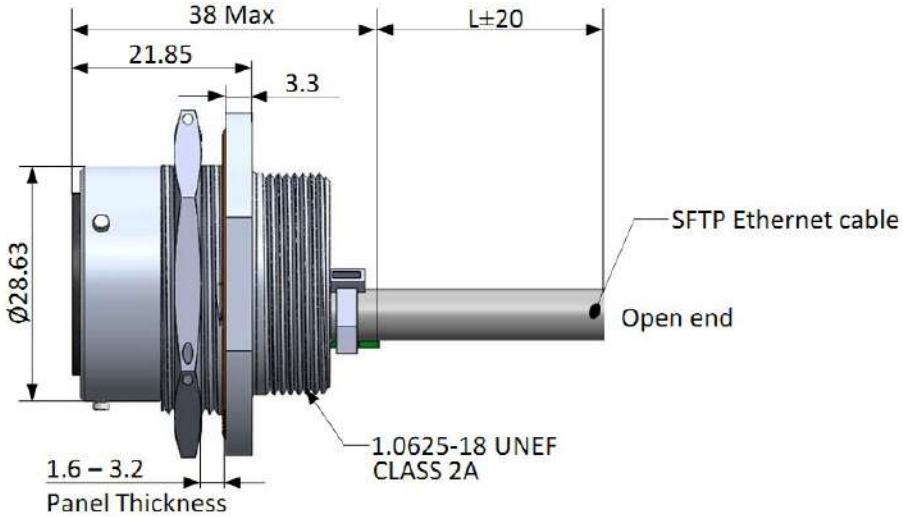

Jam Nut Receptacle with RJ45 female + open PCB with 8 tinned holes for cable soldering

ALRJ-B-JN-4-N (W, Z)

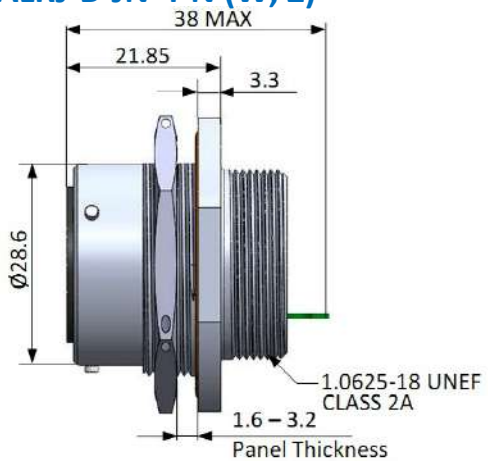

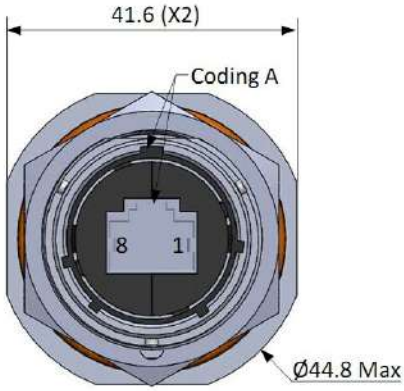

Jam Nut Receptacle with 2 Female RJ45 (Backshell with plastic gland)

ALRJ-B-JN-BK-1-N (W, Z)

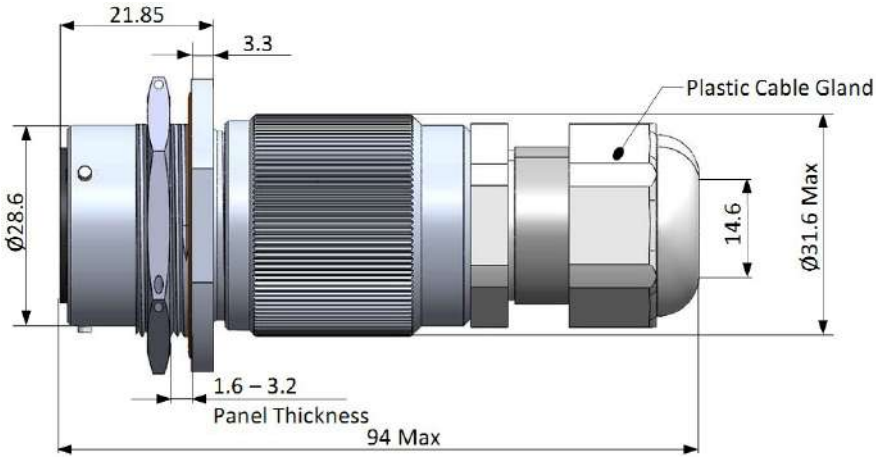

Jam Nut Receptacle with 2 Female RJ45 (Backshell with metallic gland)

ALRJ-B-JN-BKM-1-N (W, Z)

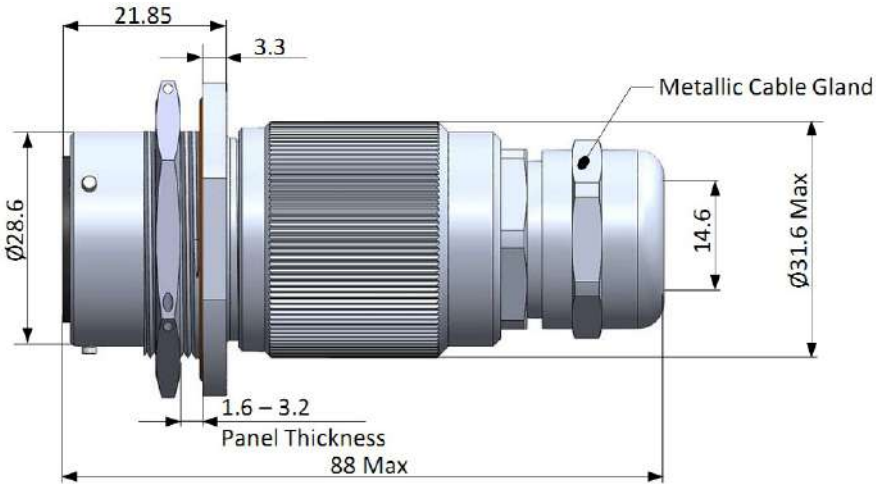

Panel Cut-Out Dimensions

Square Flange Receptacle

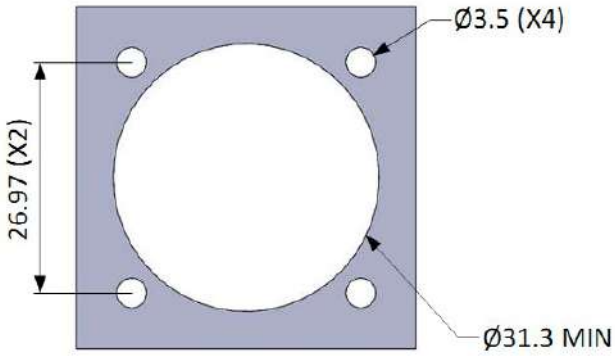

Jam Nut Receptacle

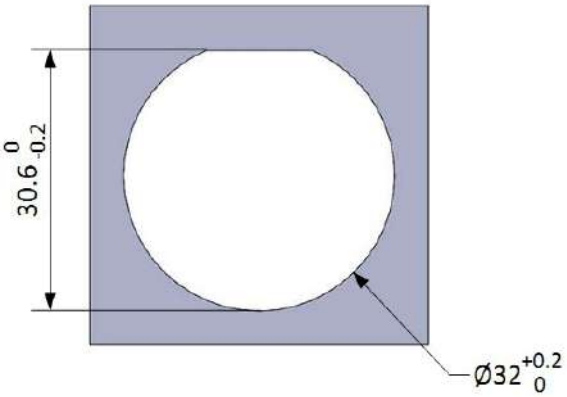

Insert Orientations

Coding Identification	Receptacle	Plug
A	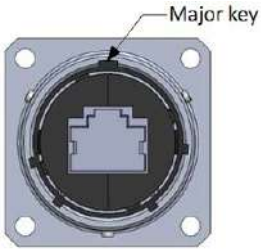	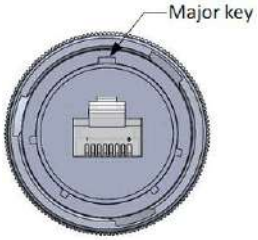
B	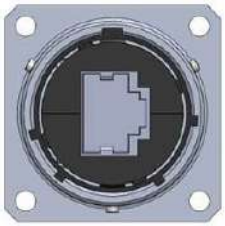	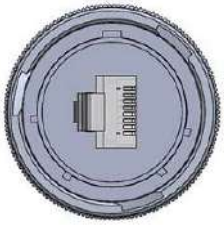
C	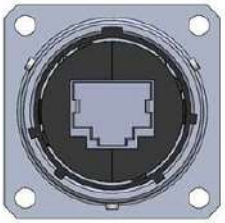	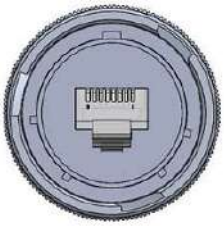
D	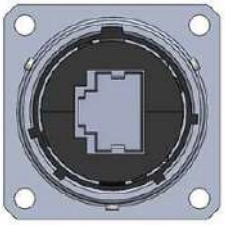	

Panel Seal

Part number: **PS-18**
Thickness: 0.7 mm
Color: Blue

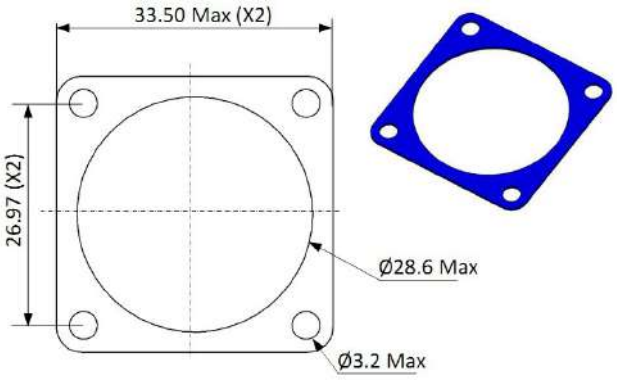

Recommended Torque Value

Backshell to Receptacle		Plastic body: 3 Nm
Plastic Cable Gland	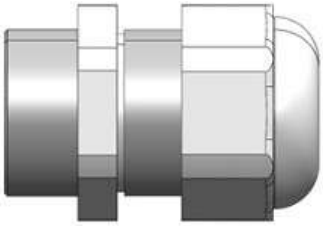	Plastic gland: 5 Nm Plastic body: 4.5 – 5.5 Nm
Metallic Cable Gland		Metallic gland: 5 Nm Metallic body: 7.5 Nm

Protective Caps. Series 52 & 53

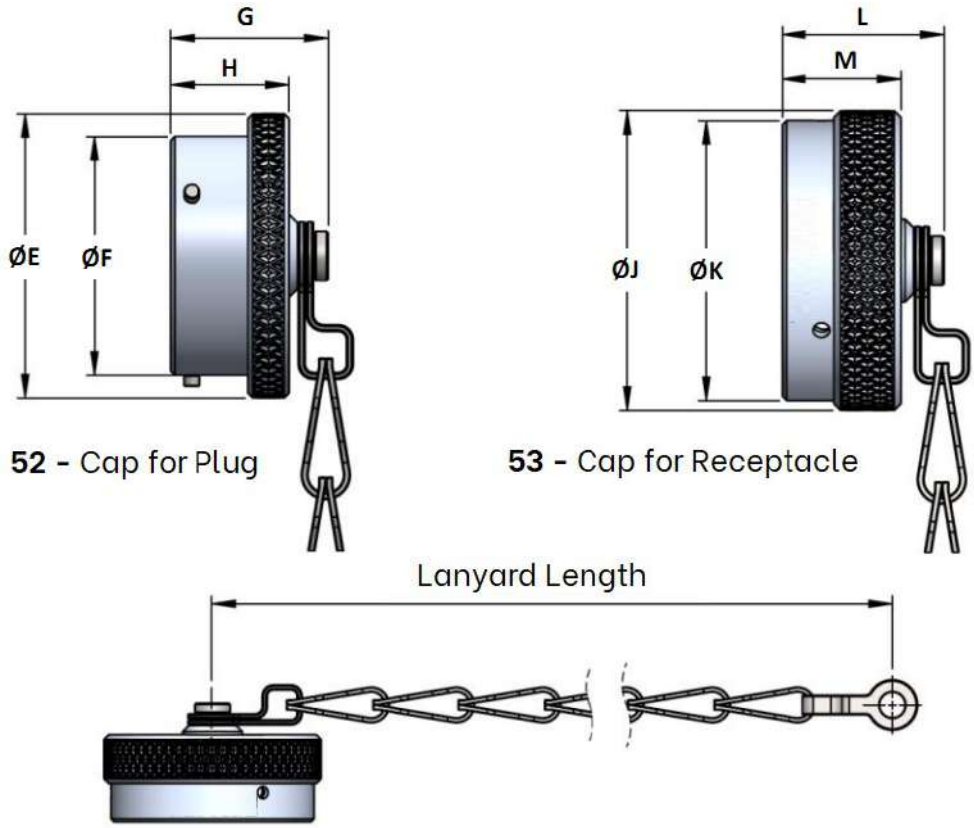

Ordering information

Basic Series	AL	53	-18	W	-Y	5	-05
Shell type:							
52 – Cap for plug							
53 – Cap for receptacle							
Shell Size: 18							
Material/Finish:							
N – Aluminum alloy/Electroless Nickel							
W – Aluminum alloy/Cadmium Olive Drab							
Z – Aluminum alloy/Zinc Nickel Black							
Lanyard Options							
SC– Stainless steel sash chain							
Y – Stainless steel wire rope							
NB– Nylon rope - black							
Lanyard Length:							
Cap for plug – 6.5 inch (160 mm)							
Cap for receptacle – 5 inch (127 mm)							
Attachment Options:							
326B – Bend Ring for Jam Nut receptacle							
05 – Eyelet for Square flange receptacle							
TW – Tie wrap for Plug							

Dimensions

Shell Size	Ø E MAX	Ø F MAX	Ø G MAX	Ø H MAX	Ø J MAX	Ø K MAX	L MAX	M MAX
18	34.92	28.58	19.84	14.27	34.92	32.42	21.44	14.27

Lanyard & Attachment Option

Stainless Steel Sash Chain
code – SC

Stainless Steel Rope/Nylon Jacket
code – Y

Nylon Rope
code – NB

Tie Wrap
code – TW

ALRJ-T Series

Technical features

Mechanical

Bayonet coupling (MIL-DTL-38999, series 3, type, shell size 19)
RJ45 cordset retention in the plug: 80N Max in the axis
RJ45 female retention in the receptacle: 40N Max in the axis
Minimum of 500 mating cycles
Vibrations: 10-500Hz, 10g, 3 axes: no discontinuity >10 ns
Shocks: IK06►weight of 250 g drop from 40 cm onto connectors (mated pair)

Environmental

Temperature range: up -40°C to +85°C
Fire retardant/Low smoke: UL94 V0
Humidity: 21 days, 43°C, 98% humidity
Sealed to IP 68 for fluid and dust laden environments
Salt spray requirement: up to 500 h
Data transmission:

- 10 Base-T, 100 Base-T, and 1G Base-T Ethernet
- High performance connectivity, up to 100 MHz

RJ45 connector details

Contacts: Phosphor Bronze, Gold flash over Nickel
Shielding: Nickel-plated brass
Body: PBT UL 94V-0
PCB: FR4, UL 94V-0 (PCB termination only)
Voltage: 125 VAC rms
Current Rating: 1.5 A
Insulation resistance: ≥ 500MΩ at 500 VDC
Dielectric strength: 1000 VAC rhm 60Hz, 1min
Impedance: 100±15 Ohm

Ordering Information for Plugs

Basic Series	ALRJ-T	-P	-W
Shell type:			
P – Plug with plastic gland			
PM – Plug with metallic gland			
Material/Finish:			
N – Aluminum alloy/Electroless Nickel			
W – Aluminum alloy/Cadmium Olive Drab			
Z – Aluminum alloy/Zinc Nickel Black			

Ordering Information for Receptacles

Basic Series	ALRJ-T	-SF	BK	-1	-W
Shell type:					
SF – Square flange receptacle					
JN – JamNut receptacle					
Backshell type:					
Omit – No backshell					
BKM – Backshell with metallic gland					
BK – Backshell with plastic gland					
Back terminations:					
1 – 2 Female RJ45					
2 – RJ45 female + RJ45 male cordset					
3 – RJ45 female + RJ45 male cordset open					
4 – RJ45 female + open PCB with 8 tinned holes for cable soldering					
Length: L (Type 2 & 3 only):					
03 – 0.3 m					
05 – 0.5 m					
10 – 1.0 m					
15 – 1.5 m					
Material/Finish:					
N – Aluminum alloy/Electroless Nickel					
W – Aluminum alloy/Cadmium Olive Drab					
Z – Aluminum alloy/Zinc Nickel Black					
Insert Orientations:					
A, B, C, D					
Omit – for supply of RJ45 receptacle + Insert separately					

Back terminations types

Type	View	Description
1	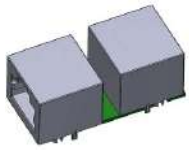	PCB + 2 Female RJ45 connectors
2		PCB + RJ45 female connector + RJ45 male cordset
3	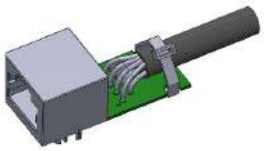	PCB + RJ45 female connector + RJ45 male cordset open end
4	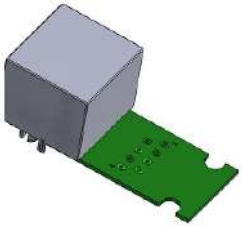	PCB + RJ45 female + Open PCB with 8 tinned holes for cable soldering

Cat.5e per TIA/EIA 568B and Class D per ISO/IEC 11801

PCB Pin Number		T568B Pair	RJ45 Male Pin Number	T568B Pair Color	RJ45 Male
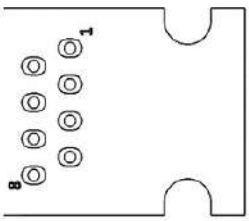	1	2	1	White/Orange	
	2		2	Orange	
	3	3	3	White/Green	
	4	1	4	Blue	
	5		5	White/Blue	
	6	3	6	Green	
	7	4	7	White/Brown	
	8		8	Brown	

Dimensions

Plug with Plastic Gland
ALRJ-T-P-N (W, Z)

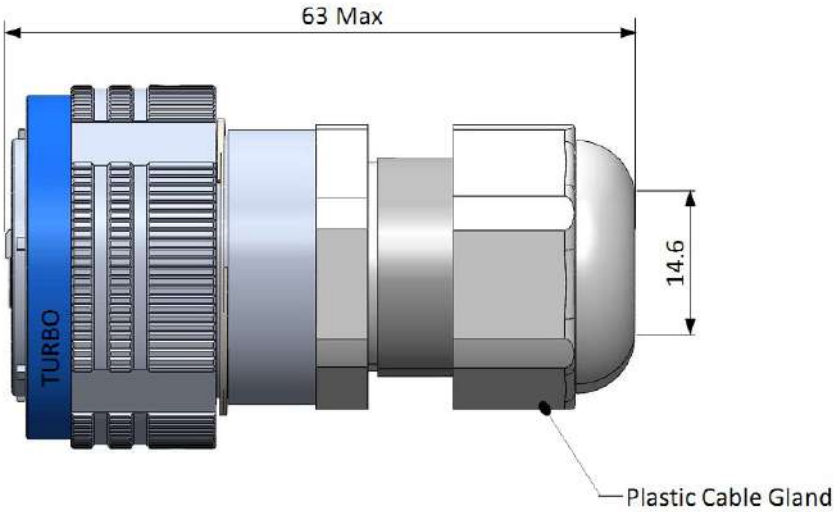

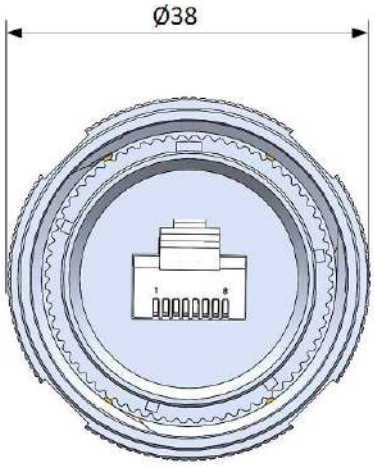

Plug with Metallic Gland
ALRJ-T-PM-N (W, Z)

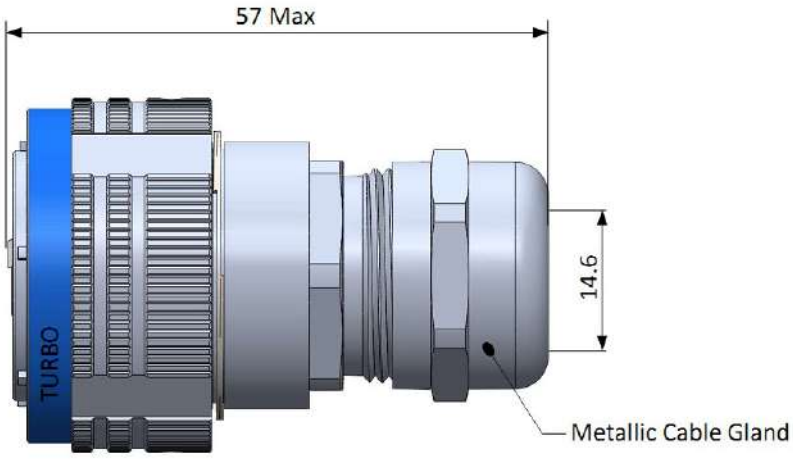

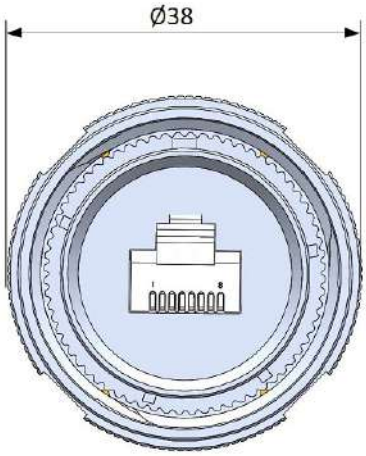

Square Flange Receptacle with 2 Female RJ45
ALRJ-T-SF-1-N (W, Z)

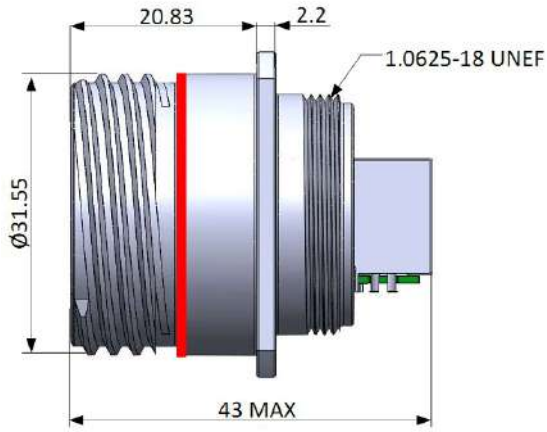

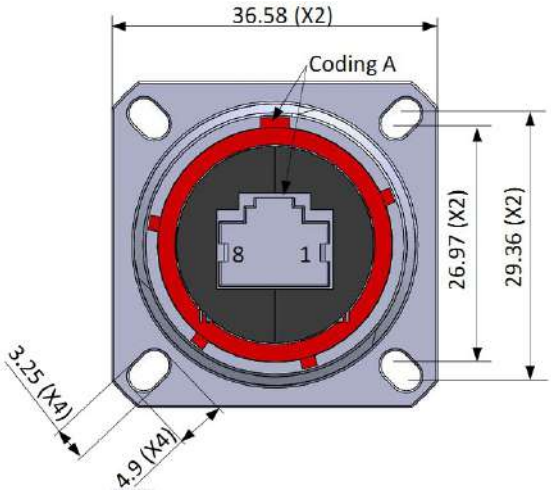

Square Flange Receptacle with RJ45 female + RJ45 male cordset
ALRJ-T-SF-2-03-N (W, Z)

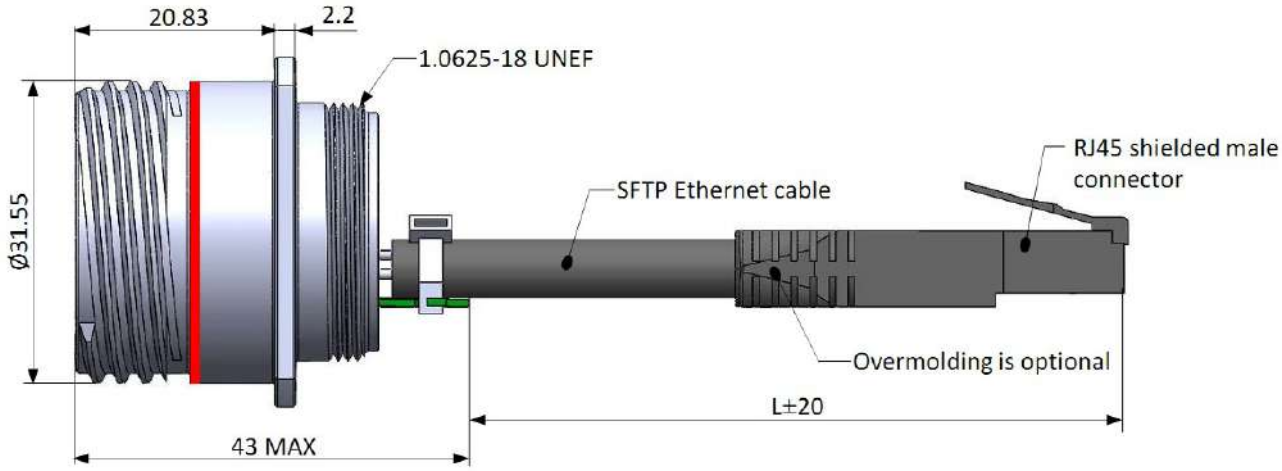

Square Flange Receptacle with RJ45 female + RJ45 male cordset open
ALRJ-T-SF-3-10-N (W, Z)

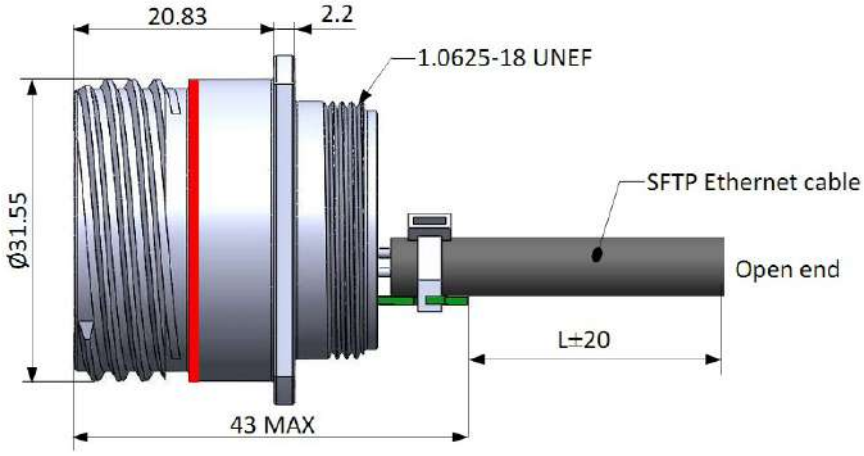

Square Flange Receptacle with RJ45 female + open PCB with 8 tinned holes for cable soldering

ALRJ-T-SF-4-N (W, Z)

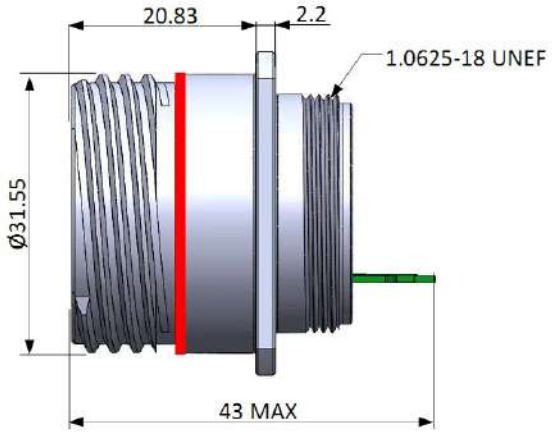

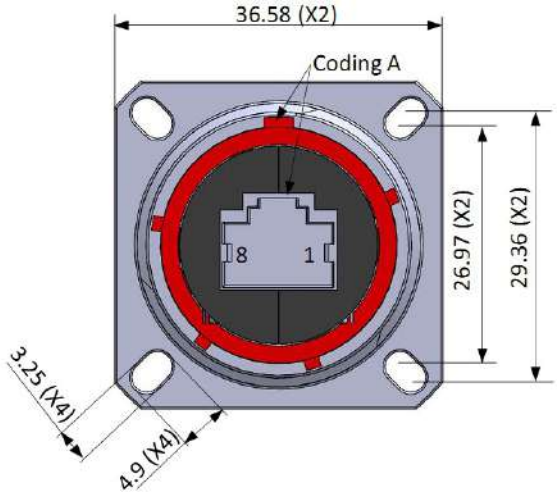

Square Flange Receptacle with 2 Female RJ45 (Backshell with plastic gland)

ALRJ-T-SF-BK-1-N (W, Z)

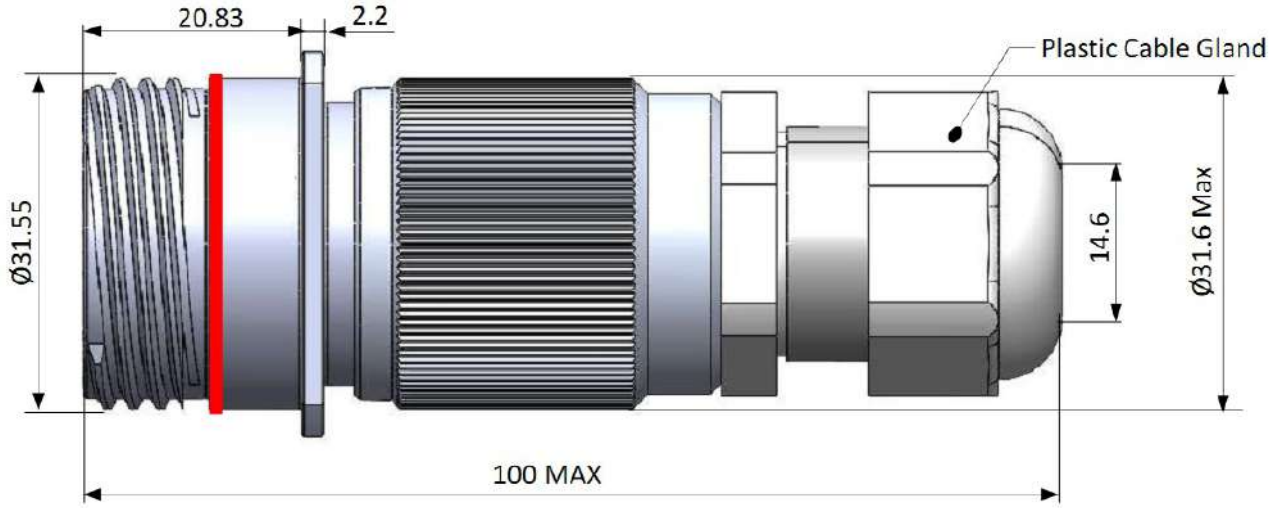

Square Flange Receptacle with 2 Female RJ45 (Backshell with metallic gland)

ALRJ-T-SF-BKM-1-N (W, Z)

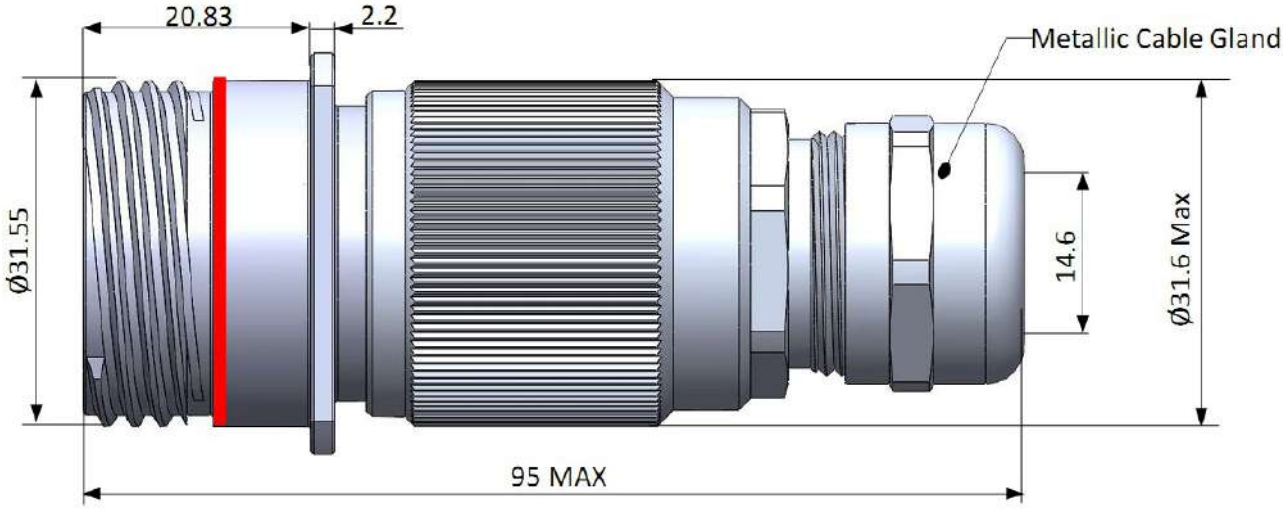

Jam Nut Receptacle with 2 Female RJ45
ALRJ-T-JN-1-N (W, Z)

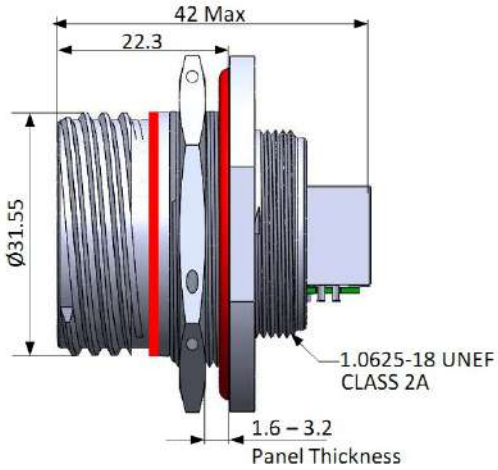

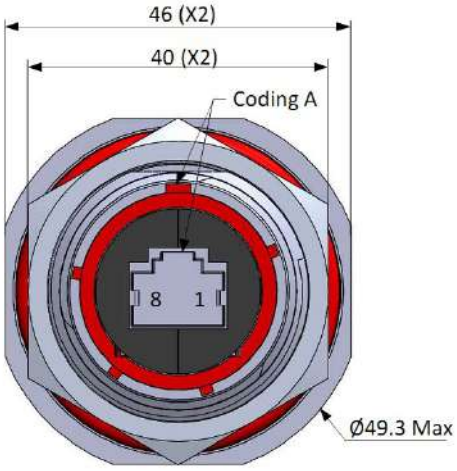

Jam Nut Receptacle with RJ45 female + RJ45 male cordset
ALRJ-T-JN-2-03-N (W, Z)

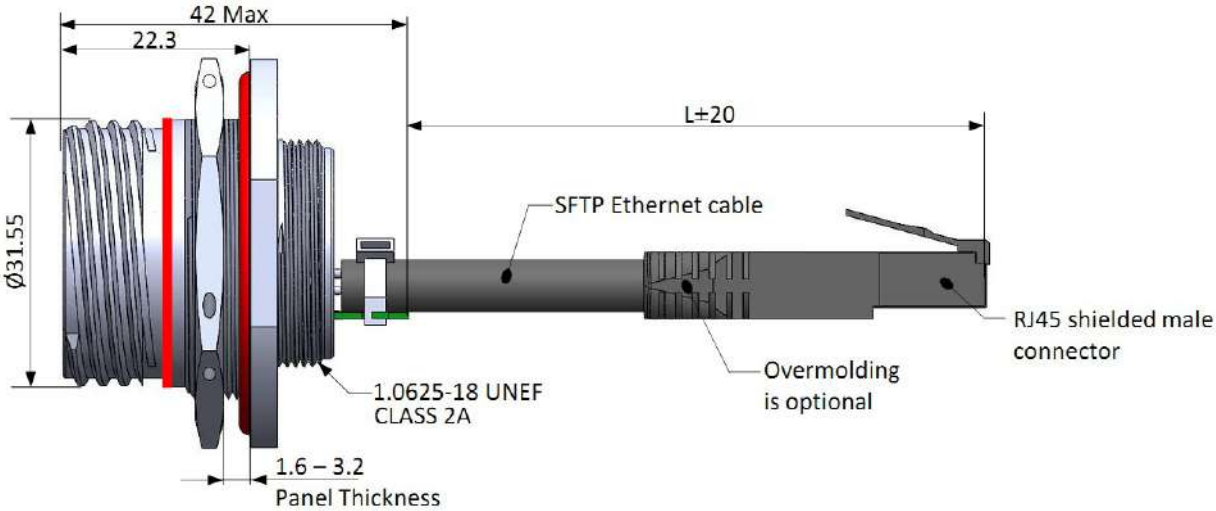

Jam Nut Receptacle with RJ45 female + RJ45 male cordset open
ALRJ-T-JN-3-10-N (W, Z)

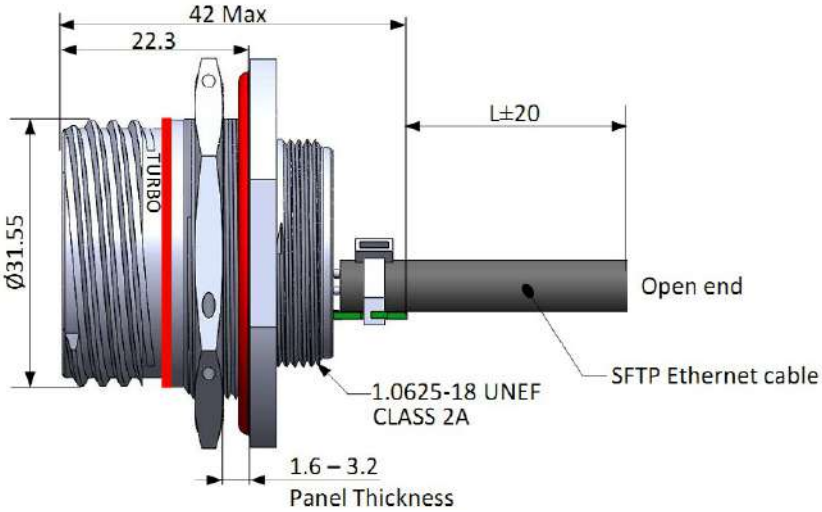

Jam Nut Receptacle with RJ45 female + open PCB with 8 tinned holes for cable soldering

ALRJ-T-JN-4-N (W, Z)

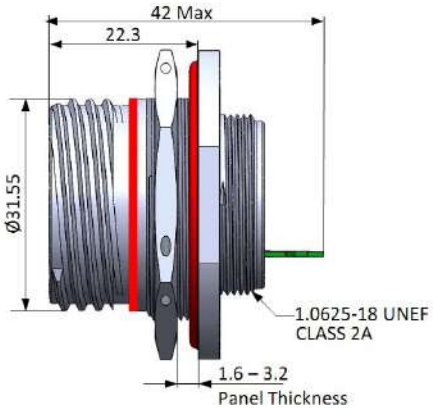

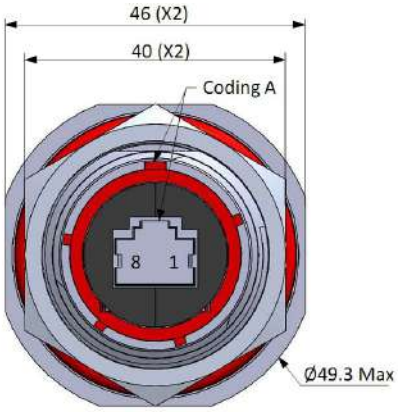

Jam Nut Receptacle with 2 Female RJ45 (Backshell with plastic gland)

ALRJ-T-JN-BK-1-N (W, Z)

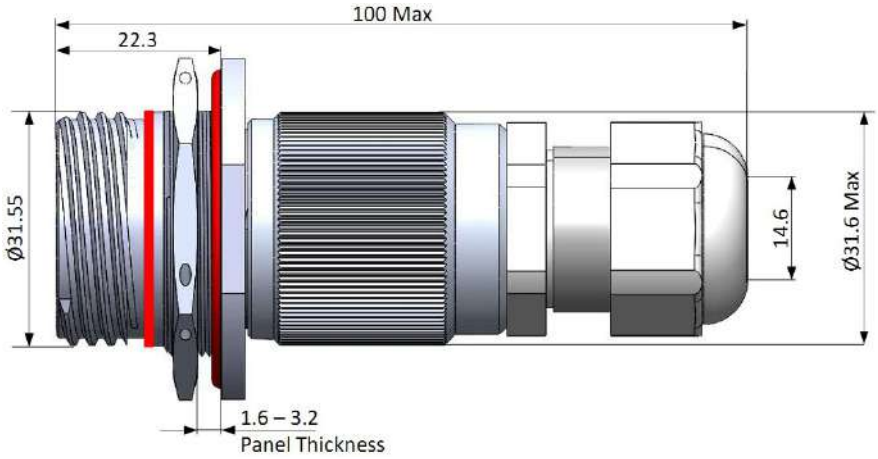

Jam Nut Receptacle with 2 Female RJ45 (Backshell with metallic gland)

ALRJ-T-JN-BKM-1-N (W, Z)

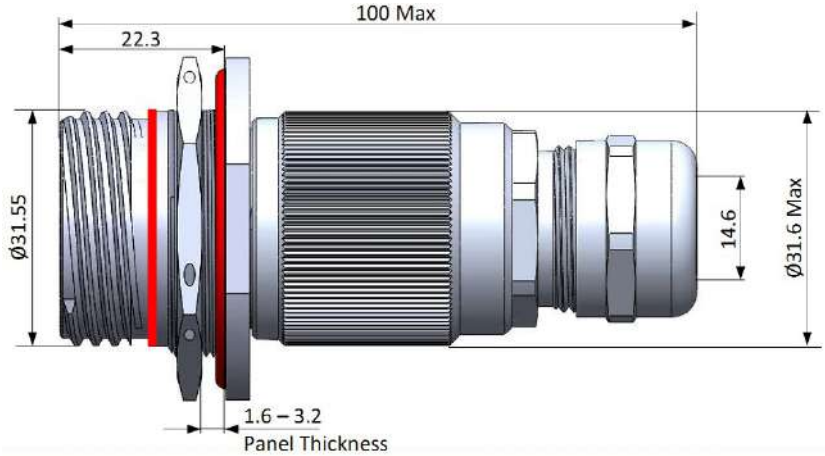

Panel Cut-Out Dimensions

Square Flange Receptacle

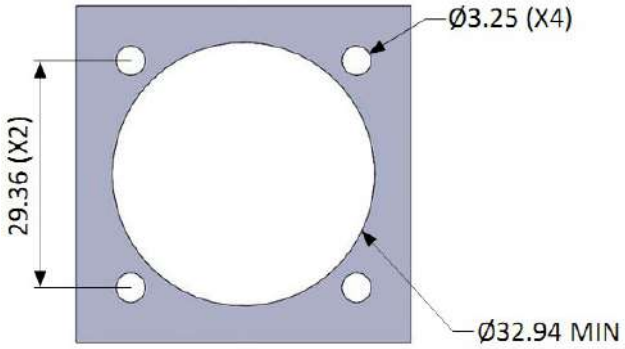

Jam Nut Receptacle

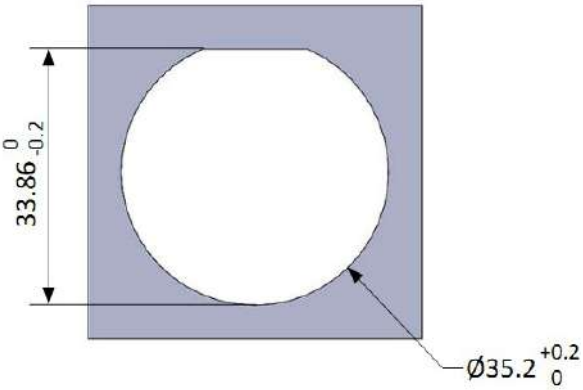

Insert Orientations

Coding Identification	Receptacle	Plug
A	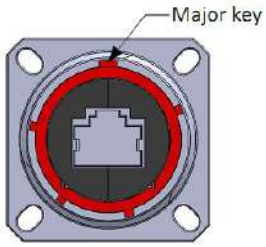	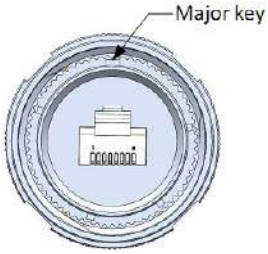
B	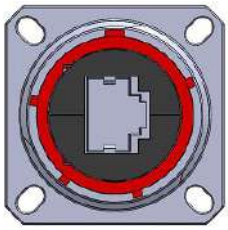	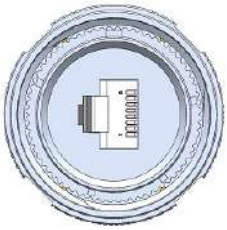
C	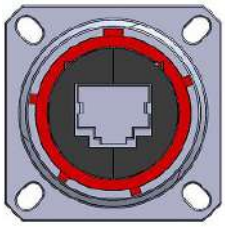	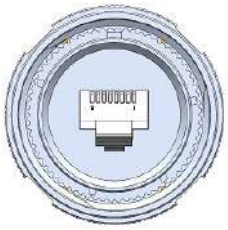
D	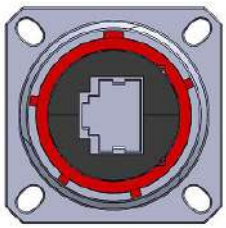	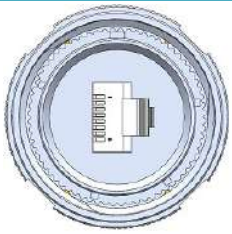

Recommended Torque Value

Backshell to Receptacle		Plastic body: 3 Nm
Plastic Cable Gland	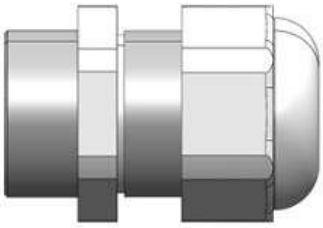	Plastic gland: 5 Nm Plastic body: 4.5 – 5.5 Nm
Metallic Cable Gland		Metallic gland: 5 Nm Metallic body: 7.5 Nm

Protective Caps. Series 32 & 33

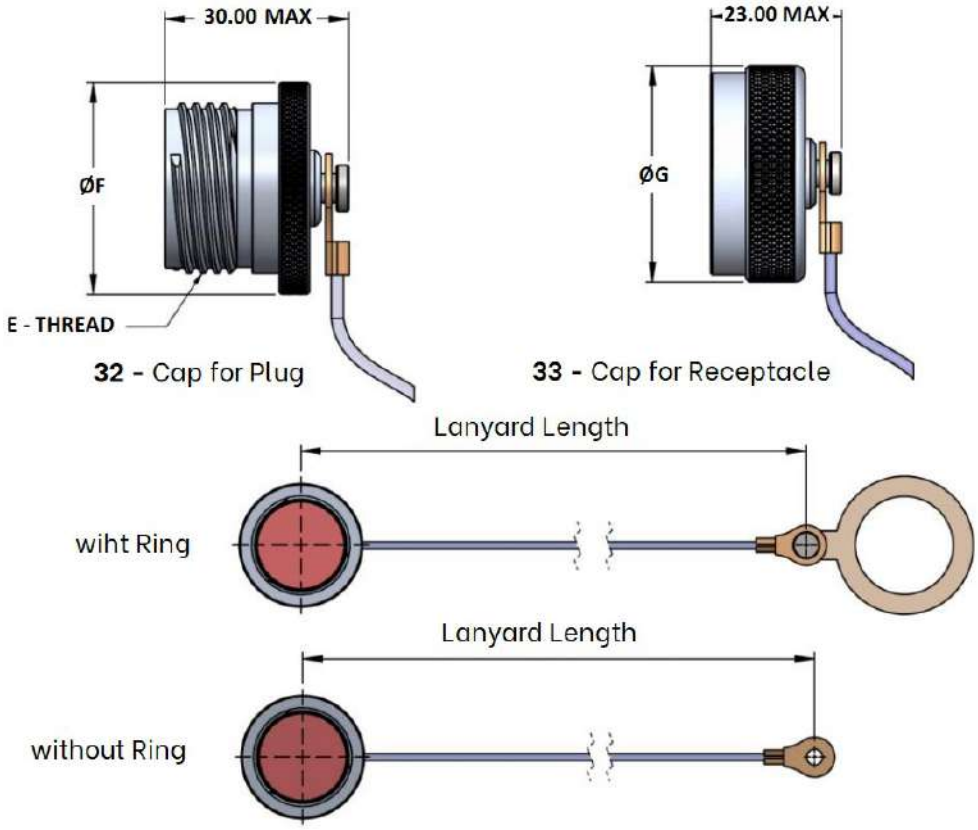

Ordering information

Basic Series	AL	33	-18	W	-Y	5	-05
Shell type:							
52 – Cap for plug							
53 – Cap for receptacle							
Shell Size: 18							
Material/Finish:							
N – Aluminum alloy/Electroless Nickel							
W – Aluminum alloy/Cadmium Olive Drab							
Z – Aluminum alloy/Zinc Nickel Black							
Lanyard Options							
SC– Stainless steel sash chain							
Y – Stainless steel wire rope							
NB– Nylon rope - black							
Lanyard Length:							
Cap for plug – 6.5 inch (160 mm)							
Cap for receptacle – 5 inch (127 mm)							
Attachment Options:							
326B – Bend Ring for Jam Nut receptacle							
05 – Eyelet for Square flange receptacle							
TW – Tie wrap for Plug							

Dimensions

Shell Size	E Thread	Ø F MAX	Ø G MAX
19	1.2500-0.1P-0.3L-TS	40.00	39.00

Lanyard & Attachment Option

Stainless Steel Sash Chain
code – SC

Stainless Steel Rope/Nylon Jacket
code – Y

Nylon Rope
code – NB

Tie Wrap
code – TW

CÔNG TY TNHH RỒNG VÀNG TECHNOLOGY
Địa chỉ: 48/5 Vĩnh Xuân, Phường Vĩnh thái,
Thành Phố Nha Trang, Tỉnh Khánh Hòa
Sđt: +84 79.219.2707
www.rong-vang-technology.vn